TOSHIBA TRANSISTOR SILICON PNP TRIPLE DIFFUSED TYPE

2SA1962

POWER AMPLIFIER APPLICATIONS

Unit in mm

- High Collector Voltage : $V_{CEO} = -230V$ (Min.)
- Complementary to 2SC5242
- Recommend for 80W High Fidelity Audio Frequency Amplifier Output Stage.

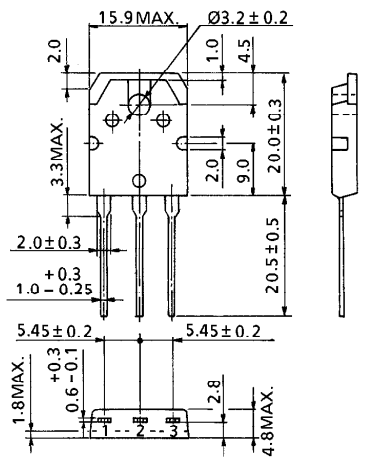

1. BASE
2. COLLECTOR (HEAT SINK)
3. EMITTER

JEDEC	—
EIAJ	—
TOSHIBA	2-16C1A

Weight : 4.7g (Typ.)

MAXIMUM RATINGS (Ta = 25°C)

CHARACTERISTIC	SYMBOL	RATING	UNIT
Collector-Base Voltage	V_{CBO}	−230	V
Collector-Emitter Voltage	V_{CEO}	−230	V
Emitter-Base Voltage	V_{EBO}	−5	V
Collector Current	I_C	−15	A
Base Current	I_B	−1.5	A
Collector Power Dissipation (Tc = 25°C)	P_C	130	W
Junction Temperature	T_j	150	°C
Storage Temperature Range	T_{stg}	−55~150	°C

ELECTRICAL CHARACTERISTICS (Ta = 25°C)

CHARACTERISTIC	SYMBOL	TEST CONDITION	MIN.	TYP.	MAX.	UNIT
Collector Cut-off Current	I_{CBO}	$V_{CB} = -230V$, $I_E = 0$	—	—	−5.0	μA
Emitter Cut-off Current	I_{EBO}	$V_{EB} = -5V$, $I_C = 0$	—	—	−5.0	μA
Collector-Emitter Breakdown Voltage	$V_{(BR)CEO}$	$I_C = -50mA$, $I_B = 0$	−230	—	—	V
DC Current Gain	$h_{FE(1)}$ (Note)	$V_{CE} = -5V$, $I_C = -1A$	55	—	160	
	$h_{FE(2)}$	$V_{CE} = -5V$, $I_C = -7A$	35	60	—	
Collector-Emitter Saturation Voltage	$V_{CE(sat)}$	$I_C = -8A$, $I_B = -0.8A$	—	−1.5	−3.0	V
Base-Emitter Voltage	V_{BE}	$V_{CE} = -5V$, $I_C = -7A$	—	−1.0	−1.5	V
Transition Frequency	f_T	$V_{CE} = -5V$, $I_C = -1A$	—	30	—	MHz
Collector Output Capacitance	C_{ob}	$V_{CB} = -10V$, $I_E = 0$, f = 1MHz	—	360	—	pF

Note : $h_{FE(1)}$ Classification R : 55~110, O : 80~160

961001EAA2

- TOSHIBA is continually working to improve the quality and the reliability of its products. Nevertheless, semiconductor devices in general can malfunction or fail due to their inherent electrical sensitivity and vulnerability to physical stress. It is the responsibility of the buyer, when utilizing TOSHIBA products, to observe standards of safety, and to avoid situations in which a malfunction or failure of a TOSHIBA product could cause loss of human life, bodily injury or damage to property. In developing your designs, please ensure that TOSHIBA products are used within specified operating ranges as set forth in the most recent products specifications. Also, please keep in mind the precautions and conditions set forth in the TOSHIBA Semiconductor Reliability Handbook.
- The information contained herein is presented only as a guide for the applications of our products. No responsibility is assumed by TOSHIBA CORPORATION for any infringements of intellectual property or other rights of the third parties which may result from its use. No license is granted by implication or otherwise under any intellectual property or other rights of TOSHIBA CORPORATION or others.
- The information contained herein is subject to change without notice.

I_C – V_{CE}

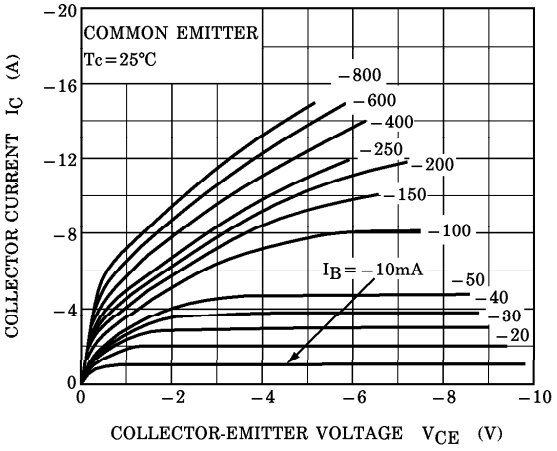

I_C – V_{BE}

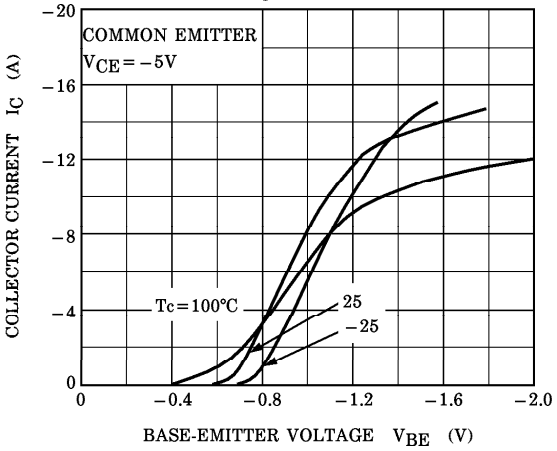

$V_{CE\,(sat)}$ – I_C

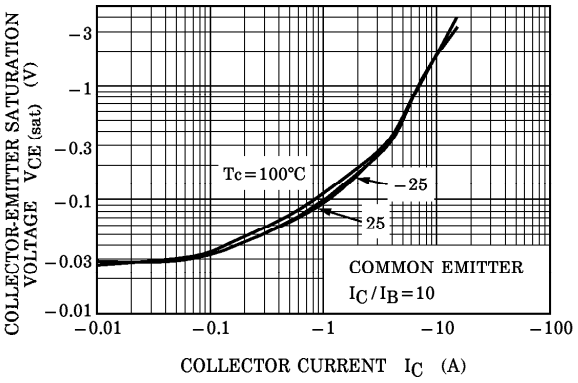

h_{FE} – I_C

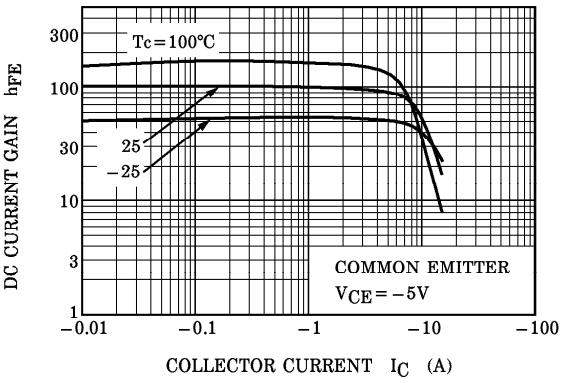

SAFE OPERATING AREA

