UTC 2SB688 PNP EPITAXIAL SILICON TRANSISTOR

HIGH POWER AMPLIFIER APPLICATION

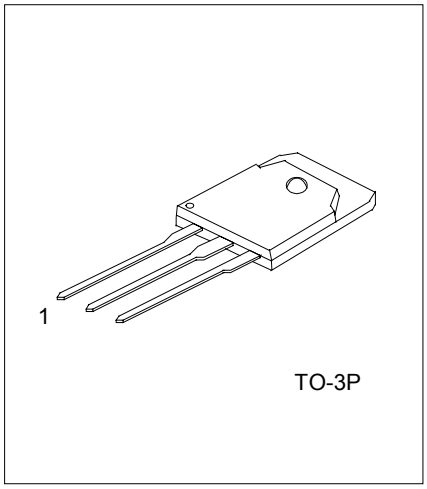

1: BASE 2: COLLECTOR 3: EMITTER

*Pb-free plating product number: 2SB688L

FEATURES

* Complementary to 2SD718.
* Recommended for 45 ~ 50W Audio Frequency Amplifier Output Stage.

ABSOLUTE MAXIMUM RATINGS

(Ta=25℃)

PARAMETER	SYMBOL	RATINGS	UNIT
Collector-Base Voltage	V_{CBO}	-120	V
Collector-Emitter Voltage	V_{CEO}	-120	V
Emitter Base Voltage	V_{EBO}	-5	V
Collector Current	I_C	-10	A
Base Current	I_B	-1	A
Collector Power Dissipation (T_C=25℃)	P_C	80	W
Junction Temperature	T_J	150	℃
Storage Temperature Range	T_{STG}	-40 ~ +150	℃

ELECTRICAL CHARACTERISTICS

(Ta=25℃)

PARAMETER	SYMBOL	TEST CONDITIONS	MIN	TYP	MAX	UNIT
Collector Cut-off Current	I_{CBO}	V_{CB} = -120V, I_E = 0			-10	μA
Emitter Cut-off Current	I_{EBO}	V_{EB} = -5V, I_C = 0			-10	μA
Collector-Emitter Breakdown Voltage	$V_{(BR)CEO}$	I_C = -50mA, I_B= 0	-120			V
DC Current Gain	h_{FE}	V_{CE} = -5V, I_C = -1A	55		160	
Collector-Emitter Saturation Voltage	$V_{CE(sat)}$	I_C = -5A, I_B = -0.5A			-2.5	V
Base-Emitter Voltage	V_{BE}	V_{CE} = -5A, I_C= -5A			-1.5	V
Transition Frequency	f_T	V_{CE} = -5A, I_C= -1A		10		MHz
Collector Output Capacitance	C_{ob}	V_{CB} = -10V, I_E = 0, f=1MHz		280		pF

CLASSIFICATION OF hFE

RANK	R	O
RANGE	55 ~ 110	80 ~ 160

TYPICAL CHARACTERISTICS

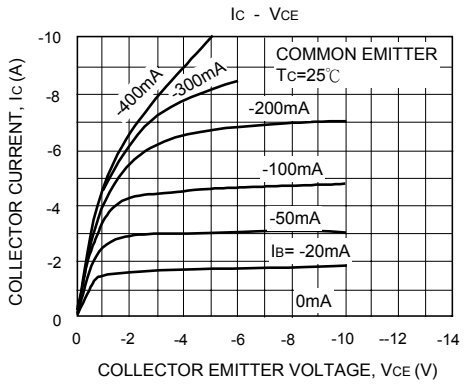

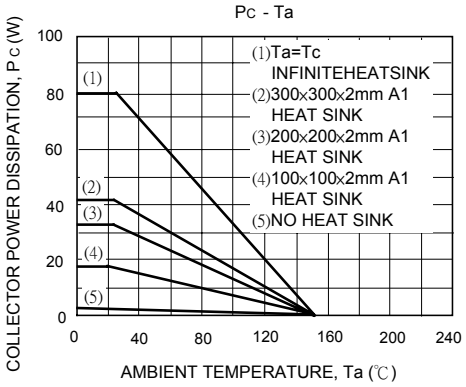

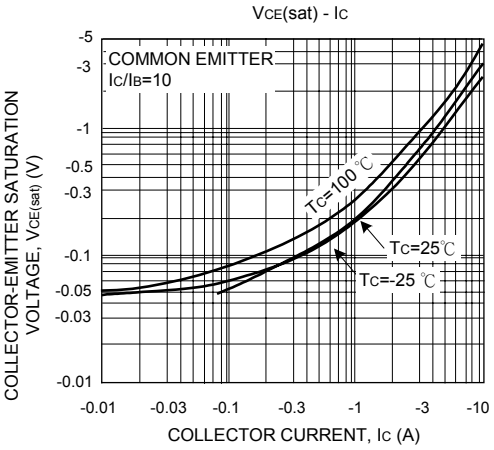

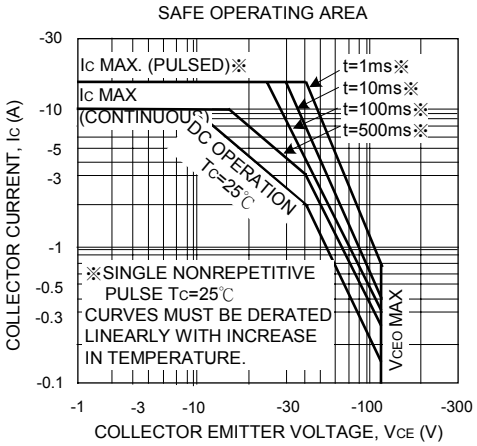

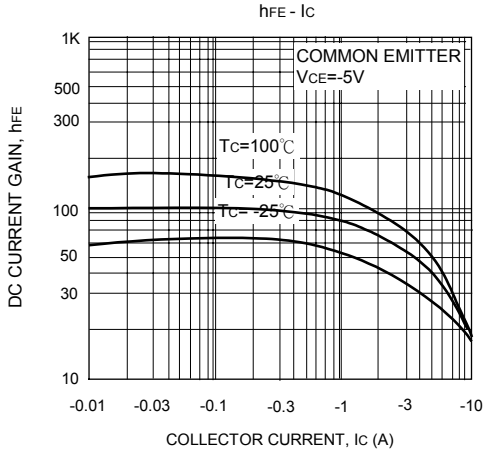

UTC assumes no responsibility for equipment failures that result from using products at values that exceed, even momentarily, rated values (such as maximum ratings, operating condition ranges, or other parameters) listed in products specifications of any and all UTC products described or contained herein. UTC products are not designed for use in life support appliances, devices or systems where malfunction of these products can be reasonably expected to result in personal injury. Reproduction in whole or in part is prohibited without the prior written consent of the copyright owner. The information presented in this document does not form part of any quotation or contract, is believed to be accurate and reliable and may be changed without notice.