FUJI ELECTRIC

2SK2518-01MR

FAP-IIA Series

N-channel MOS-FET			
200V	0,13Ω	20A	50W

> Features

- High Speed Switching
- Low On-Resistance
- No Secondary Breakdown
- Low Driving Power
- High Voltage
- VGS = ± 30V Guarantee
- Avalanche Proof

> Outline Drawing

TO-220F15

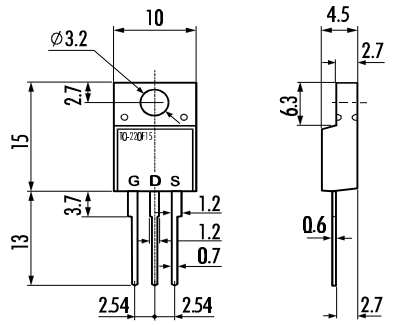

> Applications

- Switching Regulators
- UPS
- DC-DC converters
- General Purpose Power Amplifier

> Maximum Ratings and Characteristics

- Absolute Maximum Ratings (TC=25°C), unless otherwise specified

Item	Symbol	Rating	Unit
Drain-Source-Voltage	V_{DS}	200	V
Drain-Gate-Voltage(R_{GS}=20KΩ)	V_{DGR}	200	V
Continous Drain Current	I_D	20	A
Pulsed Drain Current	$I_{D(puls)}$	80	A
Gate-Source-Voltage	V_{GS}	±30	V
Max. Power Dissipation	P_D	50	W
Operating and Storage Temperature Range	T_{ch}	150	°C
	T_{stg}	-55 ~ +150	°C

> Equivalent Circuit

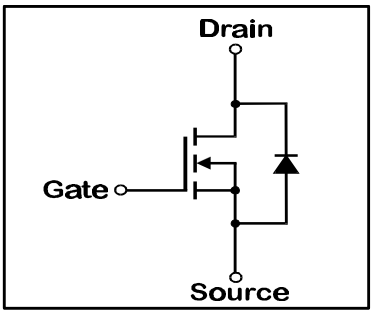

- Electrical Characteristics (T_C=25°C), unless otherwise specified

Item	Symbol	Test conditions	Min.	Typ.	Max.	Unit
Drain-Source Breakdown-Voltage	$V_{(BR)DSS}$	I_D=1mA V_{GS}=0V	200			V
Gate Threshhold Voltage	$V_{GS(th)}$	I_D=1mA V_{DS}=V_{GS}	2,5	3,0	3,5	V
Zero Gate Voltage Drain Current	I_{DSS}	V_{DS}=200V T_{ch}=25°C		10	500	µA
		V_{GS}=0V T_{ch}=125°C		0,2	1,0	mA
Gate Source Leakage Current	I_{GSS}	V_{GS}=±30V V_{DS}=0V		10	100	nA
Drain Source On-State Resistance	$R_{DS(on)}$	I_D=10A V_{GS}=10V		0,1	0,13	Ω
Forward Transconductance	g_{fs}	I_D=10A V_{DS}=25V	7,0	15,0		S
Input Capacitance	C_{iss}	V_{DS}=25V		1800	2700	pF
Output Capacitance	C_{oss}	V_{GS}=0V		320	480	pF
Reverse Transfer Capacitance	C_{rss}	f=1MHz		80	120	pF
Turn-On-Time t_{on} (t_{on}=$t_{d(on)}$+t_r)	$t_{d(on)}$	V_{CC}=150V		15	25	ns
	t_r	I_D=20A		60	90	ns
Turn-Off-Time t_{off} (t_{on}=$t_{d(off)}$+t_f)	$t_{d(off)}$	V_{GS}=10V		65	100	ns
	t_f	R_{GS}=10 Ω		60	90	ns
Avalanche Capability	I_{AV}	L=100µH T_{ch}=25°C	20,0			A
Diode Forward On-Voltage	V_{SD}	I_F=2xI_{DR} V_{GS}=0V T_{ch}=25°C		1,06	1,59	V
Reverse Recovery Time	t_{rr}	I_F=I_{DR} V_{GS}=0V		145		ns
Reverse Recovery Charge	Q_{rr}	-dI_F/dt=100A/µs T_{ch}=25°C		900		µC

- Thermal Characteristics

Item	Symbol	Test conditions	Min.	Typ.	Max.	Unit
Thermal Resistance	$R_{th(ch-a)}$	channel to air			62,5	°C/W
	$R_{th(ch-c)}$	channel to case			2,5	°C/W

N-channel MOS-FET			
200V	0,13Ω	20A	50W

2SK2518-01MR
FAP-IIA Series

FUJI ELECTRIC

> Characteristics

Typical Output Characteristics

$I_D=f(V_{DS})$; 80µs pulse test; $T_C=25°C$

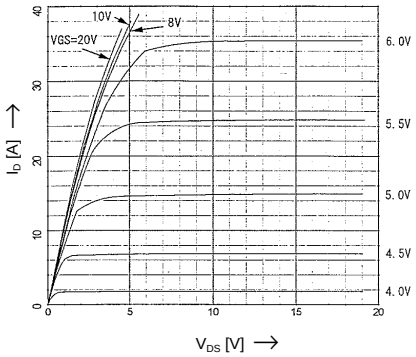

Drain-Source On-State Resistance

$R_{DS(on)} = f(T_{ch})$; $I_D=10A$; $V_{GS}=10V$

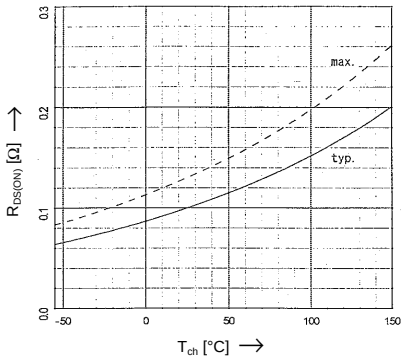

Typical Transfer Characteristics

$I_D=f(V_{GS})$; 80µs pulse test; $V_{DS}=25V$; $T_{ch}=25°C$

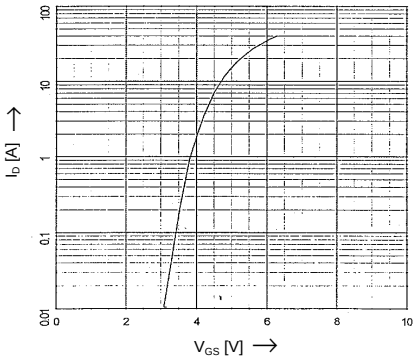

Typical Drain-Source On-State-Resistance

$R_{DS(on)}=f(I_D)$; $T_C=25°C$

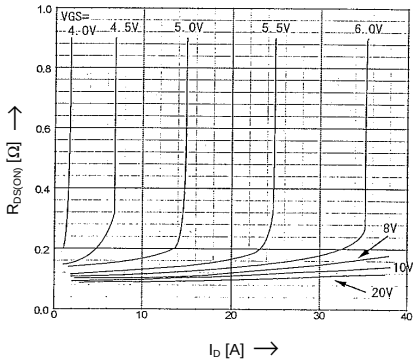

Typical Transconductance

$g_{fs}=f(I_D)$; 80µs pulse test; $V_{DS}=25V$; $T_{ch}=25°C$

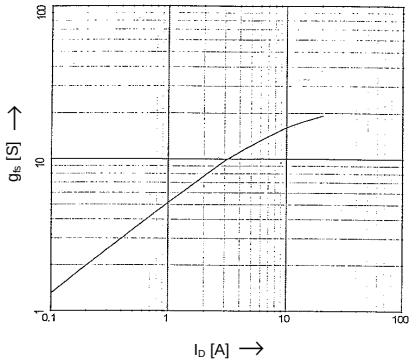

Gate Threshold Voltage

$V_{GS(th)}=f(T_{ch})$; $I_D=1mA$; $V_{DS}=V_{GS}$

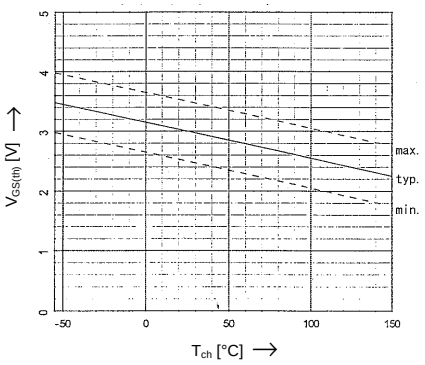

Typical Capacitances

$C=f(V_{DS})$; $V_{GS}=0V$; f=1MHz

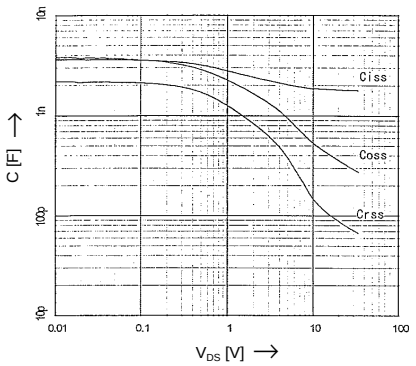

Typical Gate Charge Characteristics

$V_{GS}=f(Qg)$; $I_D=20A$

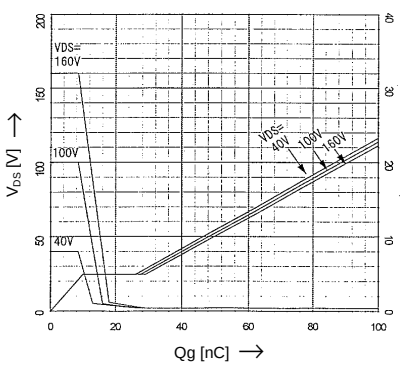

Forward Characteristics of Reverse Diode

$I_F=f(V_{SD})$; 80µs pulse test

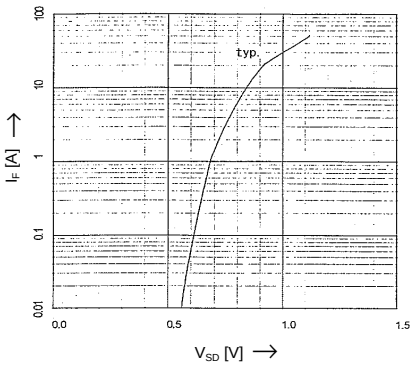

Power Dissipation

$P_D=f(Tc)$

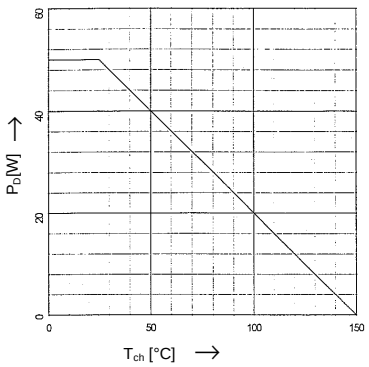

Safe Operation Area

$I_D=f(V_{DS})$: D=0,01, Tc=25°C

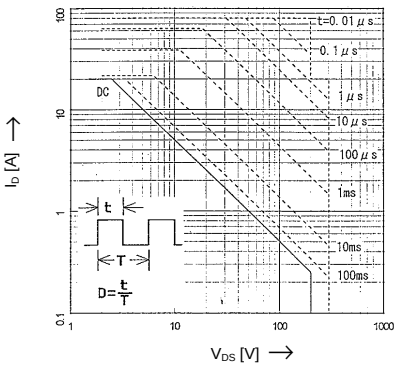

Transient Thermal impedance

$Z_{thch-c}=f(t)$ parameter:D=t/T

