Power MOSFETs and IGBT for PDP

Merits

Power MOSFET	IGBT
Low ON resistance Low Qg High avalanche tolerance	Low V_{CE} (sat) High-speed switching

PDP System

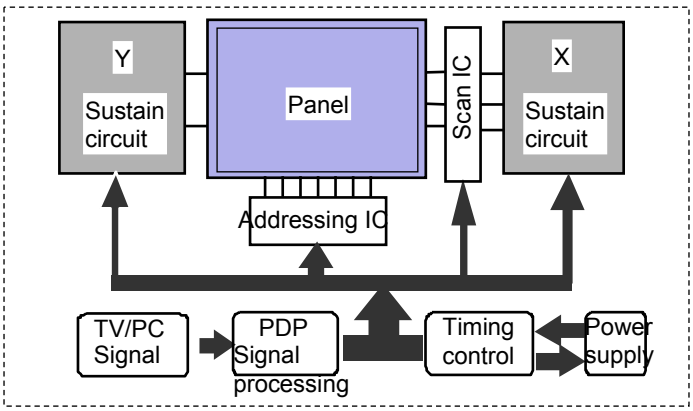

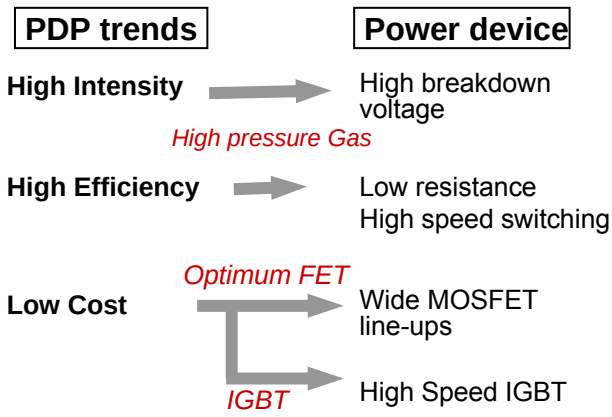

Product Lineup

Power MOSFET

P/N	Maximum Rating			Electrical Characteristics		Package
	VDSS (V)	ID (A)	VGS (V)	VGS(off) typ(V)	RDS(on) typ(mΩ)	
H7N1005LS	100	15	±20	2.0	85	LDPAK
H7N1004LS	100	30	±20	2.0	25	LDPAK
H5N2301PF	230	25	±30	3.5	65	TO-3PFM
H5N2306PF	230	30	±30	3.5	48	TO-3PFM
H5N2305PF	230	35	±30	3.5	30	TO-3PFM
H5N2509P	250	30	±30	3.5	53	TO-3PFM
H5N2503P	250	50	±30	3.5	40	TO-3P
H5N3004P	300	25	±30	3.5	75	TO-3P
H5N3007LS	300	25	±30	2.8	120	LDPAK
H5N3003P	300	40	±30	3.5	60	TO-3P
H5N3504P	350	20	±30	3.5	100	TO-3P

IGBT (High-speed type)

P/N	Maximum Rating			Electrical Charcteristics		Package
	VCES (V)	IC (A)	VGE (V)	VCE(sat) (V) typ	tf (μS) typ	
GN4030V5AB	400	30	±20	1.5	0.12	TO-220AB
GN6030V5AB	600	30	±20	1.7	0.12	TO-220AB
RJP3053DPP	300	30	±30	2.0	0.15	TO-220FN
RJP3063DPP	300	30	±30	1.7	0.30	TO-220FN
RJP3054DPP	300	35	±30	1.8	0.15	TO-220FN
RJP3064DPP	300	35	±30	1.5	0.30	TO-220FN
RJP3055DPP	300	40	±30	1.8	0.15	TO-220FN
RJP3065DPP	300	40	±30	1.5	0.3	TO-220FN
RJP4065DPP	400	40	±30	1.6	0.3	TO-220FN
RJP2557DPK	270	50	±30	1.6	0.15	TO-3P
RJP3056DPK	300	45	±30	1.6	0.15	TO-3P
RJP3057DPK	300	50	±30	1.6	0.15	TO-3P
RJP3066DPK	300	45	±30	1.4	0.3	TO-3P
RJP3067DPK	300	50	±30	1.4	0.3	TO-3P
RJP4067DPK	400	50	±30	1.7	0.35	TO-3P

©2010. Renesas Electronics Corporation, All rights reserved.
Free Datasheet http://www.datasheet4u.com/

Power MOSFETs for Backlight Inverter

Achieve Miniaturization and Higher Efficiency

Features	Merits
Low on resistance, High-speed switching	High efficiency
Low Qg, Low Qgd	
Small package, Built-in 2 elements	Mniaturization





Example of Application Circuit (LCD TV, TFT Monitor, Note PC)

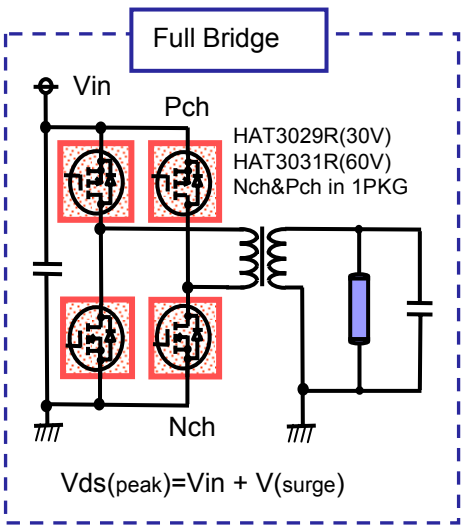

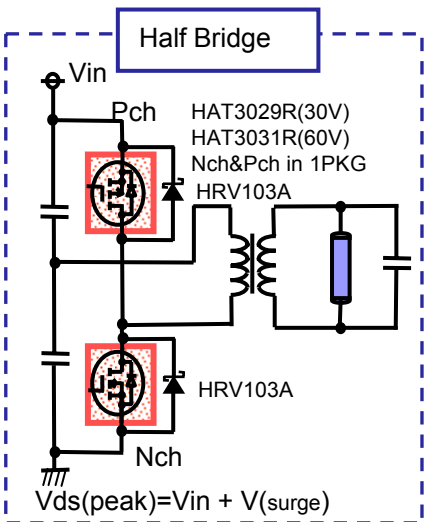

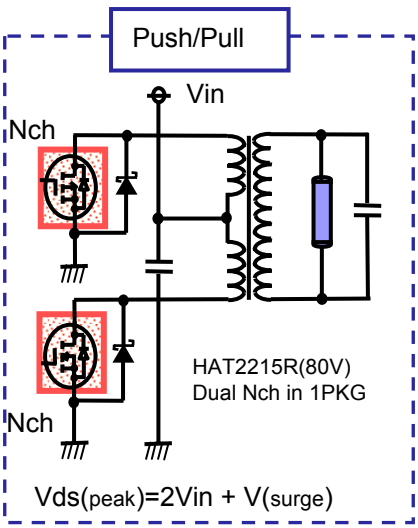

Product Lineup

No	Type No		Max.Ratings VDSS (V)	Max.Ratings VGss (V)	Max.Ratings ID (A)	RDS(on) (mΩ) VGS=4.5v(8v) typ	RDS(on) (mΩ) VGS=4.5v(8v) max	RDS(on) (mΩ) VGS=10v typ	RDS(on) (mΩ) VGS=10v max	Qgd (nc)	Qg (nC)
1	**HAT2199R**	Single	30	±20	11	17	25	13	16.5	1.8	7.5
2	**HAT2208R**		30	±20	9	24	35	18	23	1.1	4.4
3	**HAT2256R**		60	±20	8	28	41	24	30	3.2	10
4	**HAT1131R**		-30	±20	-9	21.5	31	15	19	5.8	17
5	**HAT1132R**		-30	±20	-7	27.5	40	20	25	5.2	11.5
6	**HAT2276R**	Nch+Nch	30	±20	7.5	27	40	19	24	1.2	4.6
7	**HAT2280R**		30	±20	6	40	58	27	34	1.1	3
8	**HAT2275R**		60	±20	6.6	29	43	25	32	3.2	10
9	**HAT2215R**		80	±20	3.4	100	145	88	115	1.3	7.3
10	**HAT1126R**	Pch+Pch	-60	±20	6	60	85	40	50	8	37
11	**HAT3029R**	Nch+Pch	30	±20	6	40	58	27	34	1.1	3.1
			-30	+10/-20	-6	36	53	25	32	4.4	11.5
12	**HAT3037R**		45	±20	5	55	75	44	55	0.9	3.0
			-45	+10/-20	-3.8	95	130	75	95	1.5	4.9
13	**HAT3010R**		60	±20	6	32	45	25	32	8	18
			-60	±20	-5	90	130	60	76	8	18
14	**HAT3031R**		60	±20	6.6	29	43	25	32	2.8	10
			-60	+10/-20	-3.4	120	175	95	120	2.2	6.0
15	**HAT3038R**		60	±20	5	55	80	48	60	1.4	-
			-60	±20	-3.8	90	130	80	100	2.8	-
16	**HAT3021R**		80	±20	3.4	100	145	90	115	1.3	7.3
			-80	±20	-2.6	200	290	165	210	2.4	16
17	**HAT3019R**		100	±20	3.5	120	160	90	115	3.2	15
			-100	±20	-2.3	300	500	240	300	3.1	16

©2010. Renesas Electronics Corporation, All rights reserved.
Free Datasheet http://www.datasheet4u.com/