August 2014

FDP51N25 / FDPF51N25

N-Channel UniFET™ MOSFET

250 V, 51 A, 60 mΩ

Features

- $R_{DS(on)}$ = 48 mΩ (Typ.) @ V_{GS} = 10 V, I_D = 25.5 A
- Low Gate Charge (Typ. 55 nC)
- Low C_{rss} (Typ. 63 pF)

Applications

- PDP TV
- Lighting
- Uninterruptible Power Supply
- AC-DC Power Supply

Description

UniFET™ MOSFET is Fairchild Semiconductor's high voltage MOSFET family based on planar stripe and DMOS technology. This MOSFET is tailored to reduce on-state resistance, and to provide better switching performance and higher avalanche energy strength. This device family is suitable for switching power converter applications such as power factor correction (PFC), flat panel display (FPD) TV power, ATX and electronic lamp ballasts.

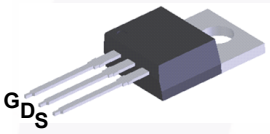

TO-220

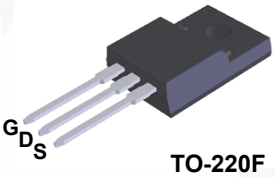

TO-220F

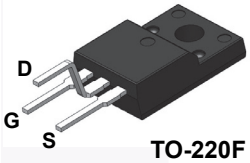

TO-220F
Y-formed

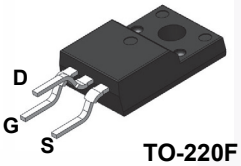

TO-220F
LG-formed

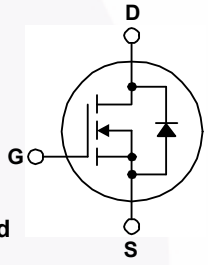

Absolute Maximum Ratings T_C = 25°C unless otherwise noted.

Symbol	Parameter		FDP51N25	FDPF51N25 FDPF51N25YDTU FDPF51N25RDTU	Unit
V_{DSS}	Drain-Source Voltage		250		V
I_D	Drain Current	- Continuous (T_C = 25°C) - Continuous (T_C = 100°C)	51 30	51* 30*	A A
I_{DM}	Drain Current	- Pulsed (Note 1)	204	204*	A
V_{GSS}	Gate-Source voltage		± 30		V
E_{AS}	Single Pulsed Avalanche Energy	(Note 2)	1111		mJ
I_{AR}	Avalanche Current	(Note 1)	51		A
E_{AR}	Repetitive Avalanche Energy	(Note 1)	32		mJ
dv/dt	Peak Diode Recovery dv/dt	(Note 3)	4.5		V/ns
P_D	Power Dissipation	(T_C = 25°C) - Derate Above 25°C	320 3.7	38 0.3	W W/°C
T_J, T_{STG}	Operating and Storage Temperature Range		-55 to +150		°C
T_L	Maximum Lead Temperature for Soldering, 1/8" from Case for 5 Seconds		300		°C

*Drain current limited by maximum junction temperature.

Thermal Characteristics

Symbol	Parameter	FDP51N25	FDPF51N25 FDPF51N25YDTU FDPF51N25RDTU	Unit
$R_{\theta JC}$	Thermal Resistance, Junction-to-Case, Max.	0.39	3.3	°C/W
$R_{\theta JA}$	Thermal Resistance, Junction-to-Ambient, Max.	62.5	62.5	°C/W

©2008 Fairchild Semiconductor Corporation

Package Marking and Ordering Information

Part Number	Top Mark	Package	Packing Method	Reel Size	Tape Width	Quantity
FDP51N25	FDP51N25	TO-220	Tube	N/A	N/A	50 units
FDPF51N25	FDPF51N25	TO-220F	Tube	N/A	N/A	50 units
FDPF51N25YDTU	FDPF51N25	TO-220F (Y-formed)	Tube	N/A	N/A	50 units
FDPF51N25RDTU	FDPF51N25	TO-220F (LG-formed)	Tube	N/A	N/A	50 units

Electrical Characteristics T_C = 25°C unless otherwise noted.

Symbol	Parameter	Conditions	Min.	Typ.	Max.	Unit
Off Characteristics						
BV_{DSS}	Drain-Source Breakdown Voltage	V_{GS} = 0 V, I_D = 250 μA, T_J = 25 °C	250	--	--	V
ΔBV_{DSS} / ΔT_J	Breakdown Voltage Temperature Coefficient	I_D = 250 μA, Referenced to 25°C	--	0.25	--	V/°C
I_{DSS}	Zero Gate Voltage Drain Current	V_{DS} = 250 V, V_{GS} = 0 V V_{DS} = 200 V, T_C = 125°C	-- --	-- --	1 10	μA μA
I_{GSSF}	Gate-Body Leakage Current, Forward	V_{GS} = 30 V, V_{DS} = 0 V	--	--	100	nA
I_{GSSR}	Gate-Body Leakage Current, Reverse	V_{GS} = -30 V, V_{DS} = 0V	--	--	-100	nA
On Characteristics						
$V_{GS(th)}$	Gate Threshold Voltage	V_{DS} = V_{GS}, I_D = 250 μA	3.0	--	5.0	V
$R_{DS(on)}$	Static Drain-Source On-Resistance	V_{GS} = 10 V, I_D = 25.5 A	--	0.048	0.060	Ω
g_{FS}	Forward Transconductance	V_{DS} = 40 V, I_D = 25.5 A	--	43	--	S
Dynamic Characteristics						
C_{iss}	Input Capacitance	V_{DS} = 25 V, V_{GS} = 0 V, f = 1 MHz	--	2620	3410	pF
C_{oss}	Output Capacitance		--	530	690	pF
C_{rss}	Reverse Transfer Capacitance		--	63	90	pF
Switching Characteristics						
$t_{d(on)}$	Turn-On Delay Time	V_{DD} = 125 V, I_D = 51 A, V_{GS} = 10 V, R_G = 25 Ω	--	62	135	ns
t_r	Turn-On Rise Time		--	465	940	ns
$t_{d(off)}$	Turn-Off Delay Time		--	98	205	ns
t_f	Turn-Off Fall Time	(Note 4)	--	130	270	ns
Q_g	Total Gate Charge	V_{DS} = 200 V, I_D = 51 A, V_{GS} = 10 V	--	55	70	nC
Q_{gs}	Gate-Source Charge		--	16	--	nC
Q_{gd}	Gate-Drain Charge	(Note 4)	--	27	--	nC
Drain-Source Diode Characteristics and Maximum Ratings						
I_S	Maximum Continuous Drain-Source Diode Forward Current		--	--	51	A
I_{SM}	Maximum Pulsed Drain-Source Diode Forward Current		--	--	204	A
V_{SD}	Drain-Source Diode Forward Voltage	V_{GS} = 0 V, I_S = 51 A	--	--	1.4	V
t_{rr}	Reverse Recovery Time	V_{GS} = 0 V, I_S = 51 A, dI_F/dt =100 A/μs	--	178	--	ns
Q_{rr}	Reverse Recovery Charge		--	4.0	--	μC

Notes:

1. Repetitive rating: pulse-width limited by maximum junction temperature.
2. L = 0.68 mH, I_{AS} = 51 A, V_{DD} = 50 V, R_G = 25 Ω, starting T_J = 25°C.
3. I_{SD} ≤ 51 A, di/dt ≤ 200 A/μs, V_{DD} ≤ BV_{DSS}, starting T_J = 25°C.
4. Essentially independent of operating temperature typical characteristics.

©2008 Fairchild Semiconductor Corporation

Typical Performance Characteristics

Figure 1. On-Region Characteristics

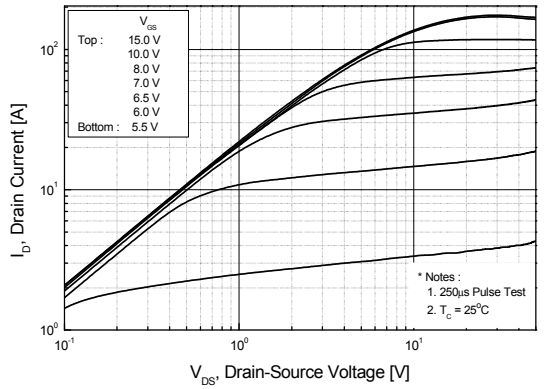

Figure 2. Transfer Characteristics

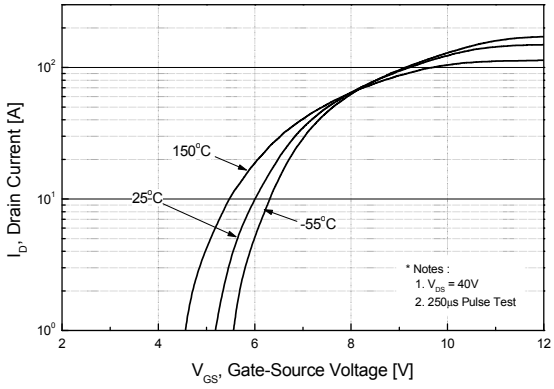

Figure 3. On-Resistance Variation vs. Drain Current and Gate Voltage

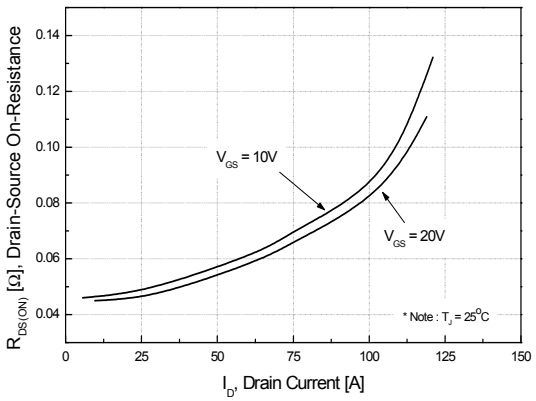

Figure 4. Body Diode Forward Voltage Variation vs. Source Current and Temperatue

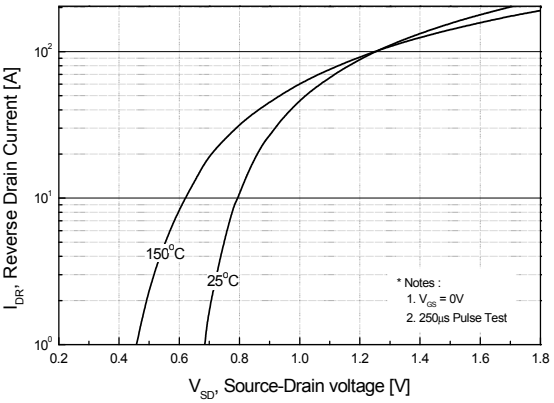

Figure 5. Capacitance Characteristics

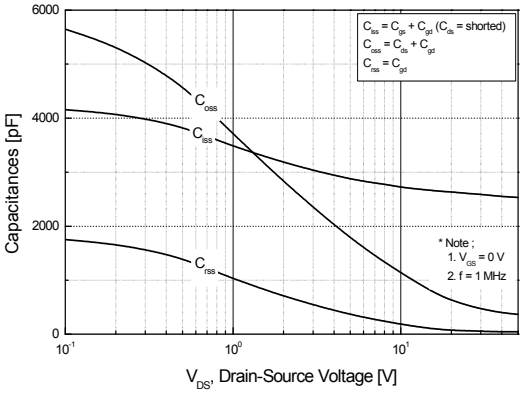

Figure 6. Gate Charge Characteristics

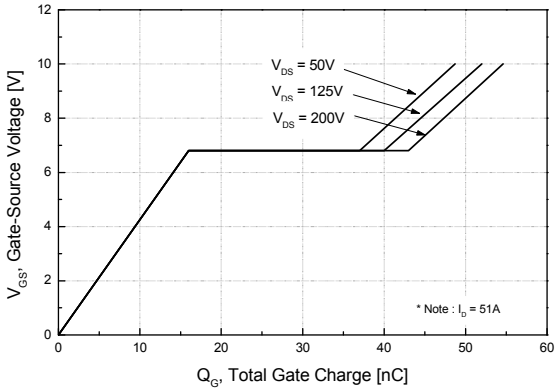

Typical Performance Characteristics (Continued)

Figure 7. Breakdown Voltage Variation vs. Temperature

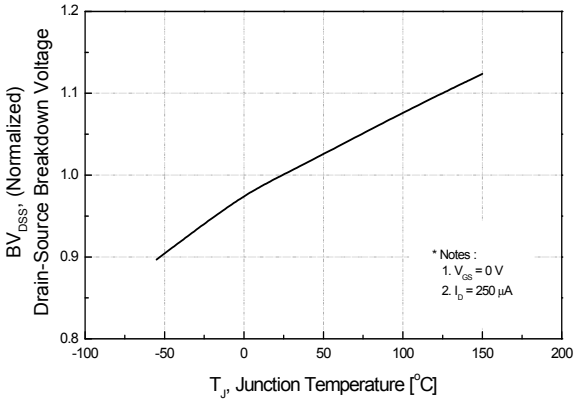

Figure 8. On-Resistance Variation vs. Temperature

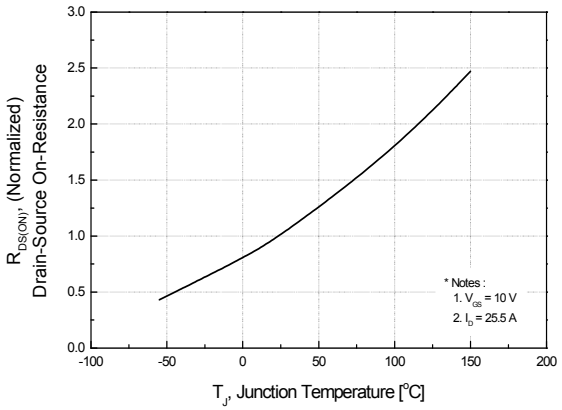

Figure 9-1. Maximum Safe Operating Area for FDP51N25

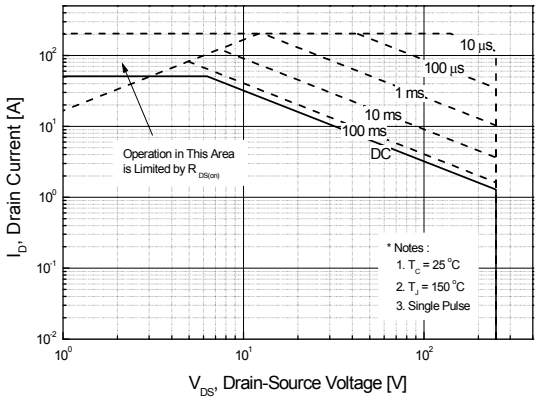

Figure 9-2. Maximum Safe Operating Area for FDPF51N25 / FDPF51N25YDTU

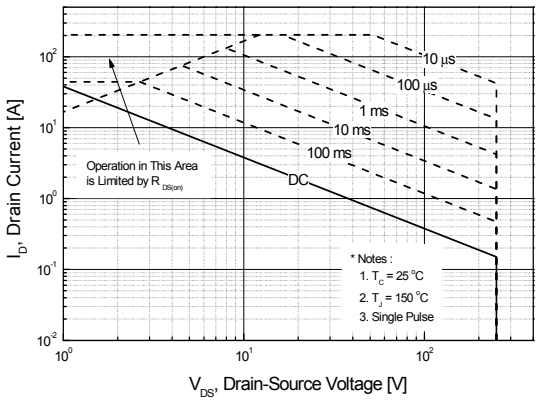

Figure 10. Maximum Drain Current vs. Case Temperature

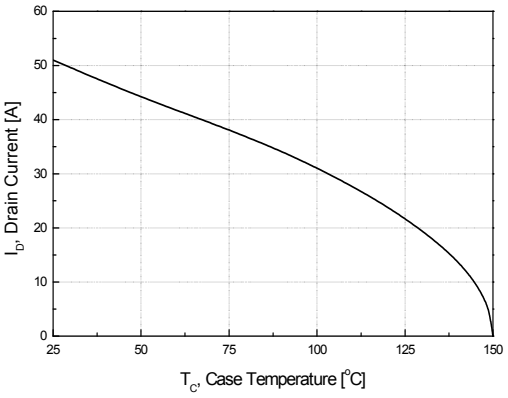

Typical Performance Characteristics (Continued)

Figure 11-1. Transient Thermal Response Curve for FDP51N25

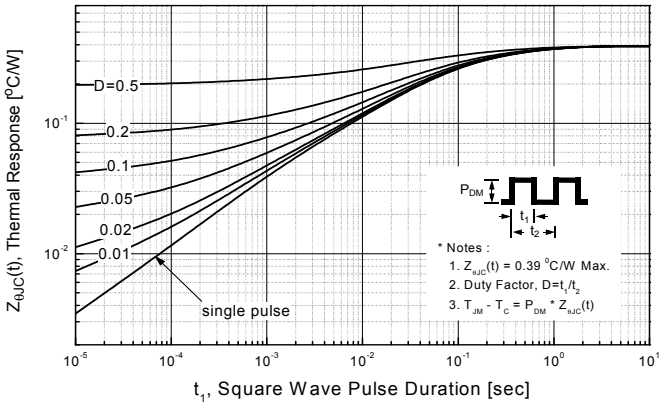

Figure 11-2. Transient Thermal Response Curve for FDPF51N25 / FDPF51N25YDTU

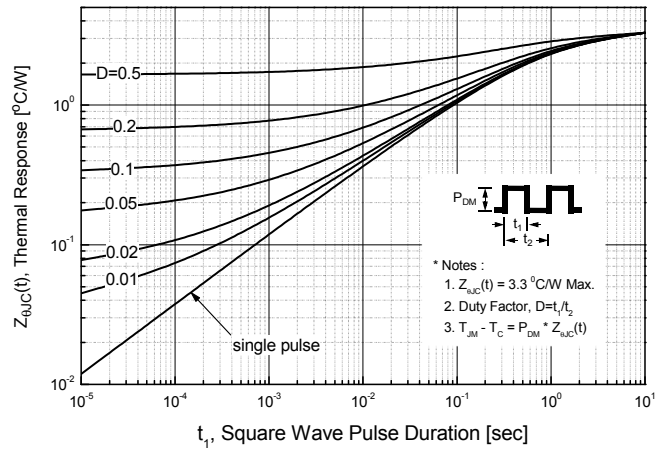

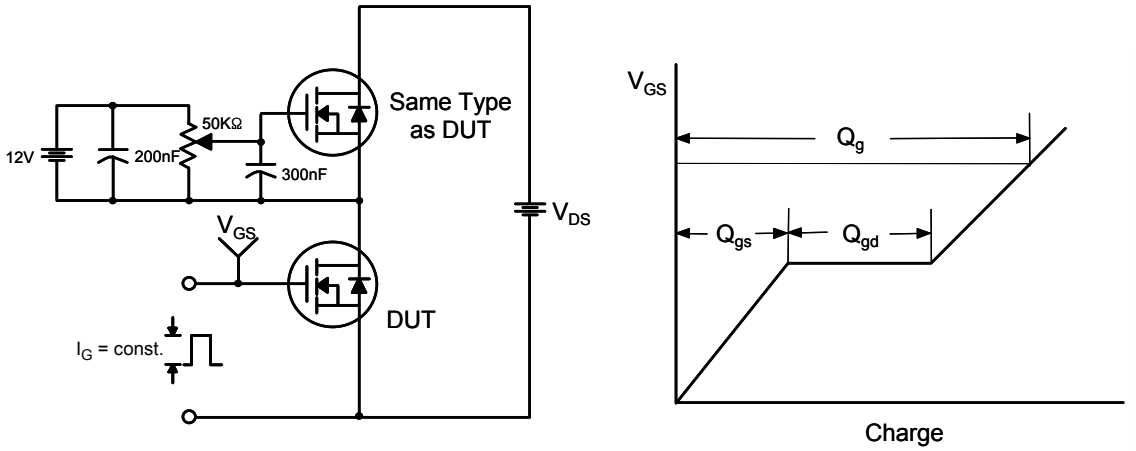

Figure 12. Gate Charge Test Circuit & Waveform

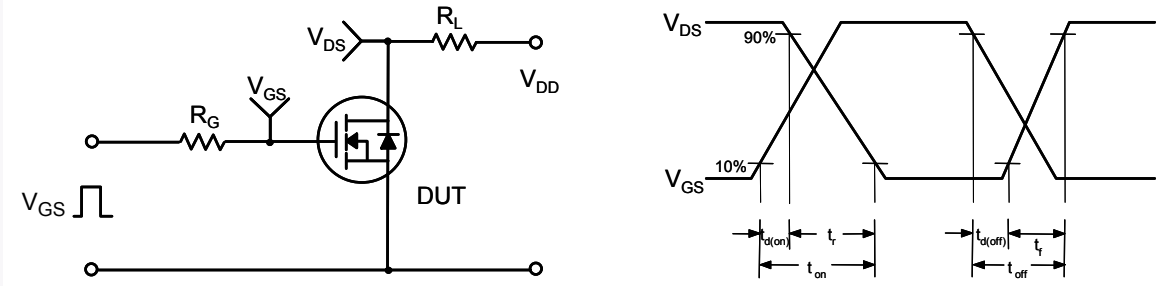

Figure 13. Resistive Switching Test Circuit & Waveforms

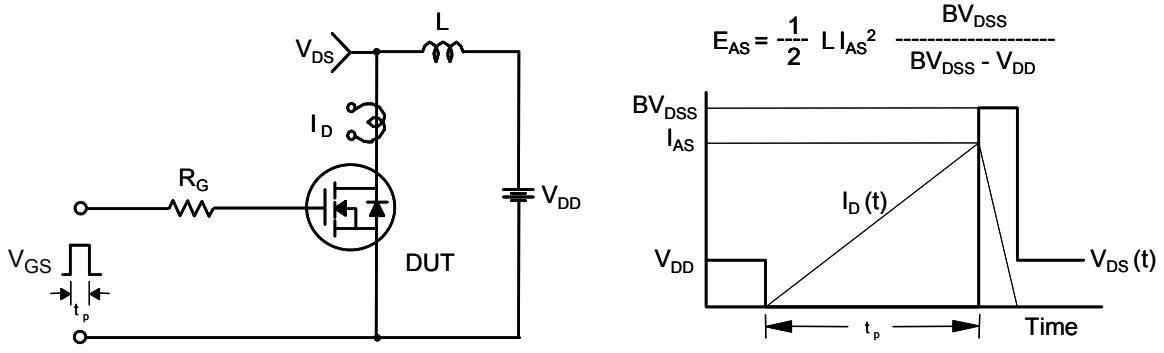

Figure 14. Unclamped Inductive Switching Test Circuit & Waveforms

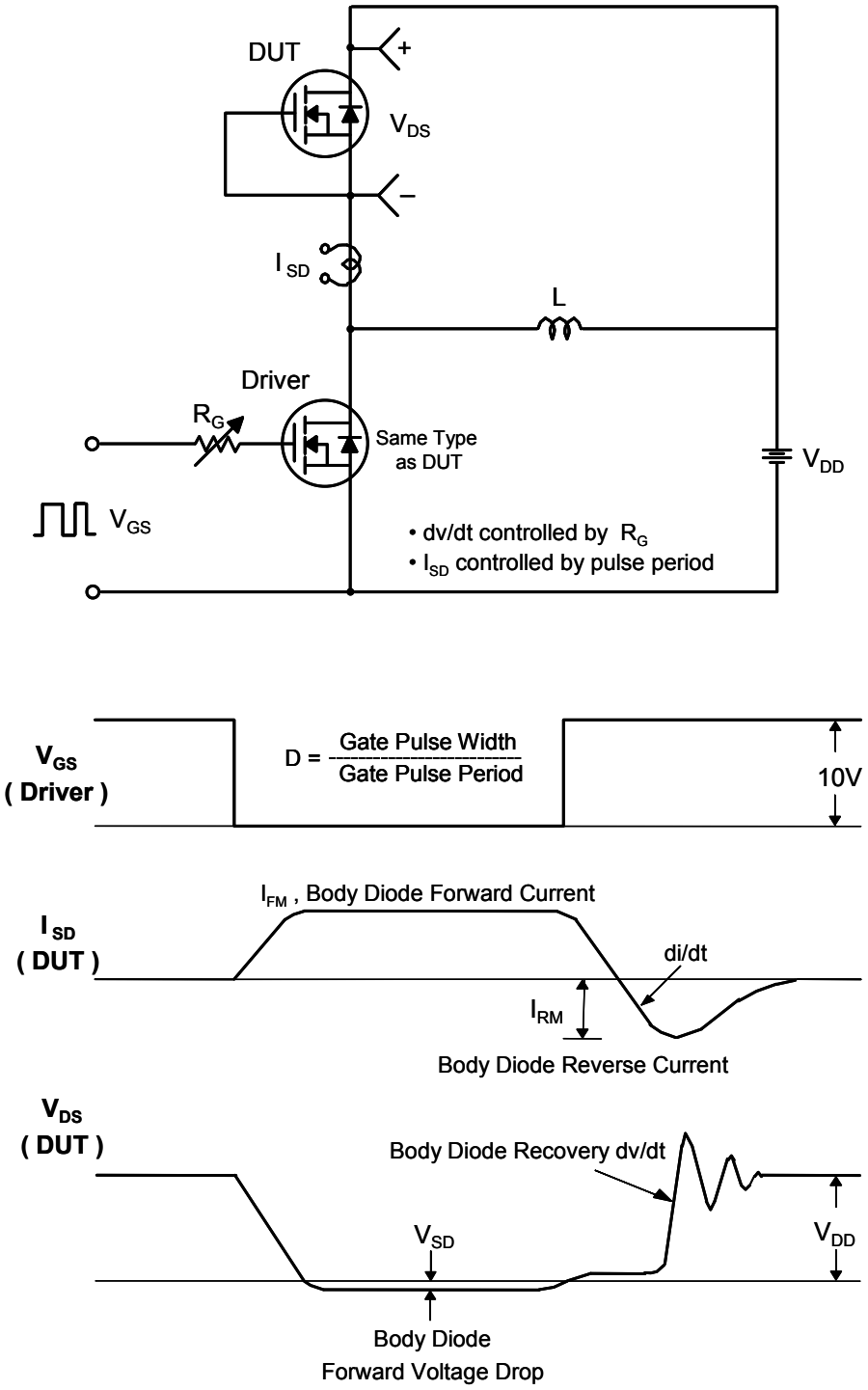

Figure 15. Peak Diode Recovery dv/dt Test Circuit & Waveforms

THIS DRAWING IS THE PROPERTY OF FAIRCHILD SEMICONDUCTOR CORPORATION. NO USE THEREOF SHALL BE MADE OTHER THAN AS A REFERENCE FOR PROPOSALS AS SUBMITTED TO FAIRCHILD SEMICONDUCTOR CORPORATION FOR JOBS TO BE EXECUTED IN CONFORMITY WITH SUCH PROPOSALS UNLESS THE CONSENT OF SAID FAIRCHILD SEMICONDUCTOR CORPORATION HAS PREVIOUSLY BEEN OBTAINED. NO PART OF THIS DRAWING SHALL BE COPIED OR DUPLICATED OR ITS CONTENTS DISCLOSED. THE INFORMATION CONTAINED ON THIS DRAWING IS CONFIDENTIAL AND PROPRIETARY.

REVISIONS

NBR	DESCRIPTION	DATE	BY/APP'D
1	RELEASED TO DCC	04JUN08	SDLEE/ SUZHOU

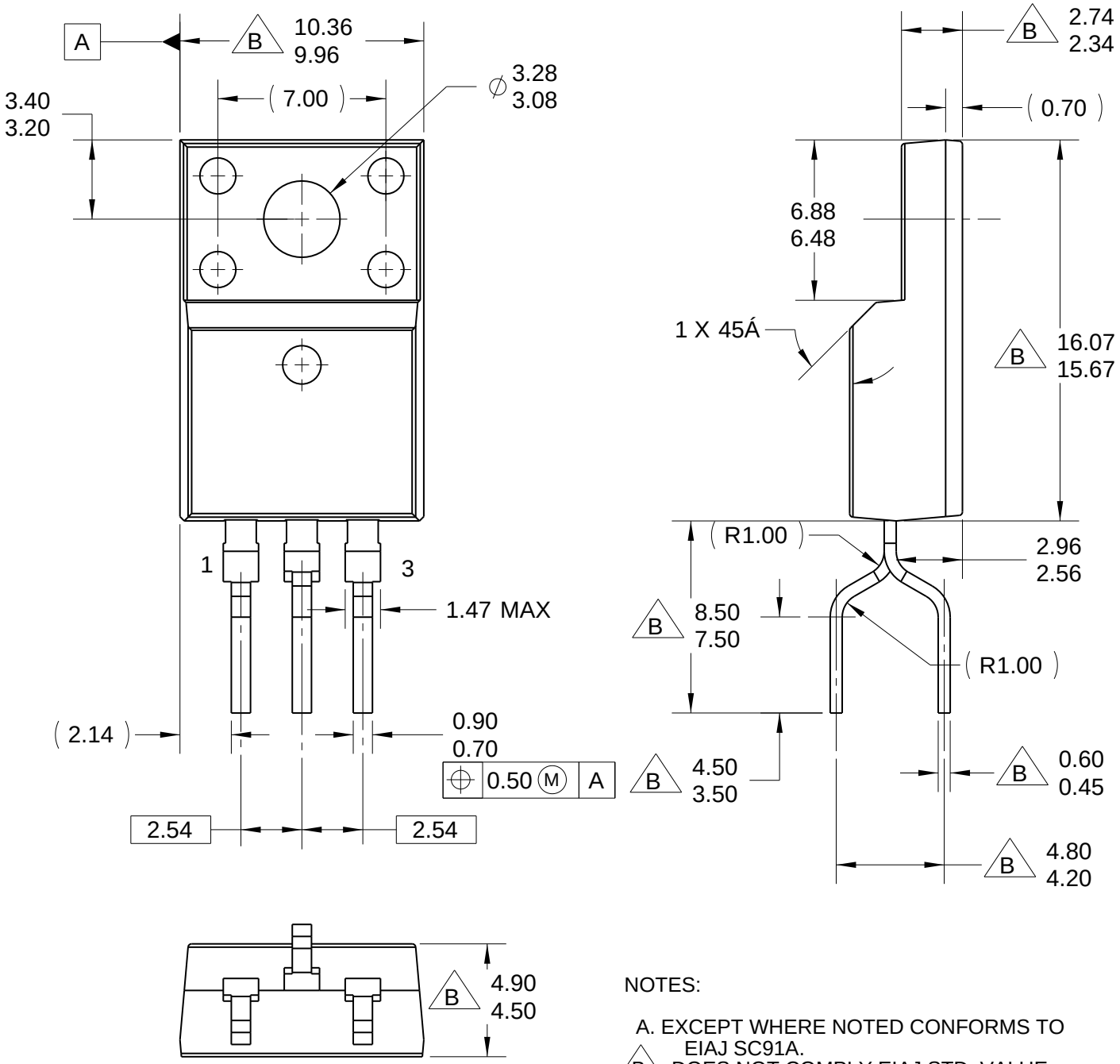

NOTES:

A. EXCEPT WHERE NOTED CONFORMS TO EIAJ SC91A.
B DOES NOT COMPLY EIAJ STD. VALUE.
C. ALL DIMENSIONS ARE IN MILLIMETERS.
D. DIMENSIONS ARE EXCLUSIVE OF BURRS, MOLD FLASH AND TIE BAR PROTRUSIONS.
E. DIMENSION AND TOLERANCE AS PER ASME Y14.5-1994.
F. DRAWING FILE NAME: TO220N03REV1

APPROVALS	DATE
DRAWN: BOBOY MALDO	04JUN08
CHECKED: SD LEE	
APPROVED: BY HUANG	
APPROVED: HOWARD ALLEN	

PROJECTION [MM] INCH

FAIRCHILD SEMICONDUCTOR™

TO220, MOLDED, 3LD, FULL PACK, EIAJ SC91, LG FORM

SCALE	SIZE	DRAWING NUMBER	REV
1:1	N/A	MKT-TO220N03	1

FORMERLY: N/A

SHEET : 1 OF 1

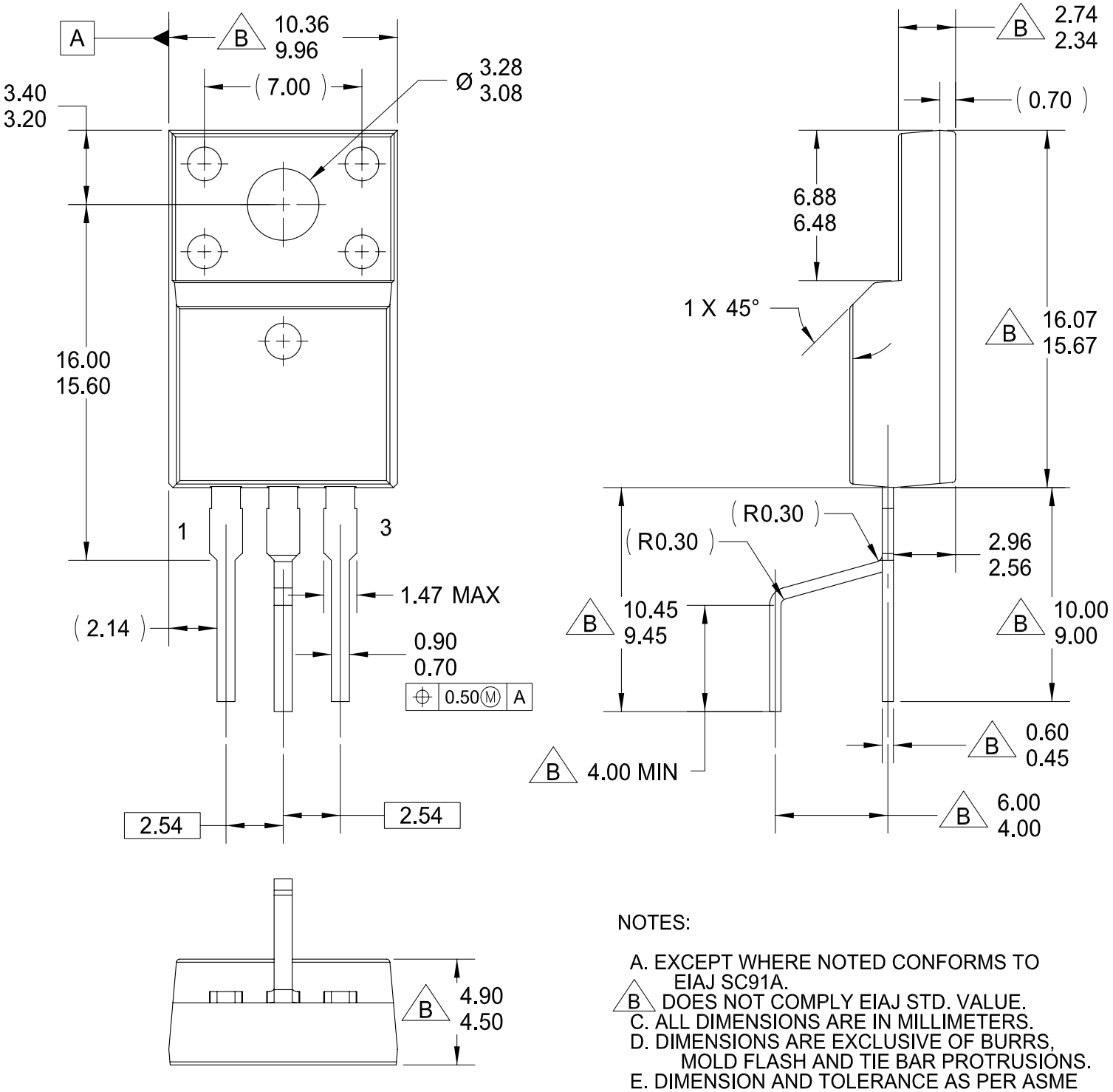

NOTES:

A. EXCEPT WHERE NOTED CONFORMS TO EIAJ SC91A.
B DOES NOT COMPLY EIAJ STD. VALUE.
C. ALL DIMENSIONS ARE IN MILLIMETERS.
D. DIMENSIONS ARE EXCLUSIVE OF BURRS, MOLD FLASH AND TIE BAR PROTRUSIONS.
E. DIMENSION AND TOLERANCE AS PER ASME Y14.5-1994.
F. DRAWING FILE NAME: TO220Q03REV1

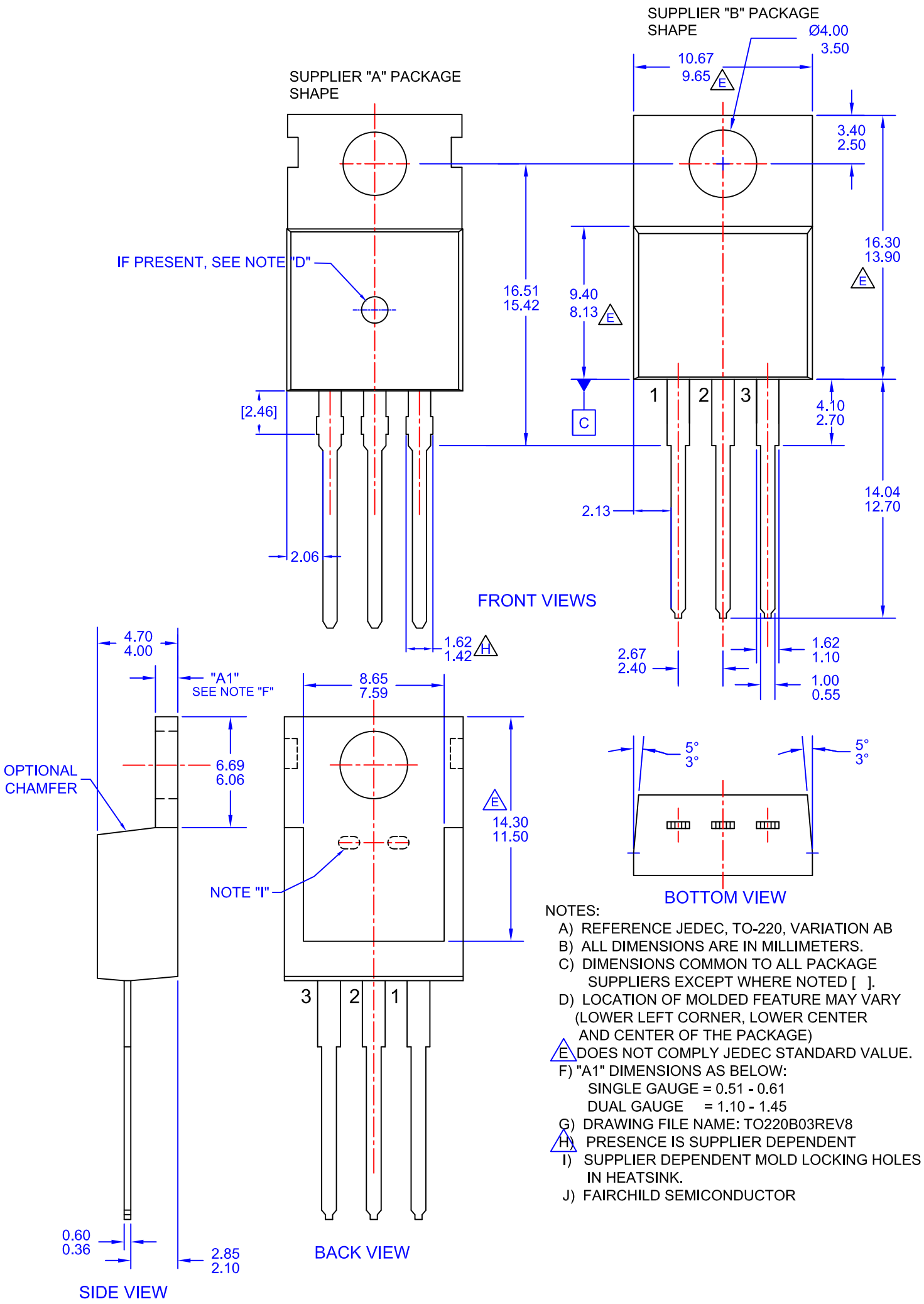

NOTES:

A) REFERENCE JEDEC, TO-220, VARIATION AB
B) ALL DIMENSIONS ARE IN MILLIMETERS.
C) DIMENSIONS COMMON TO ALL PACKAGE SUPPLIERS EXCEPT WHERE NOTED [ ].
D) LOCATION OF MOLDED FEATURE MAY VARY (LOWER LEFT CORNER, LOWER CENTER AND CENTER OF THE PACKAGE)
E) DOES NOT COMPLY JEDEC STANDARD VALUE.
F) "A1" DIMENSIONS AS BELOW:
SINGLE GAUGE = 0.51 - 0.61
DUAL GAUGE = 1.10 - 1.45
G) DRAWING FILE NAME: TO220B03REV8
H) PRESENCE IS SUPPLIER DEPENDENT
I) SUPPLIER DEPENDENT MOLD LOCKING HOLES IN HEATSINK.
J) FAIRCHILD SEMICONDUCTOR

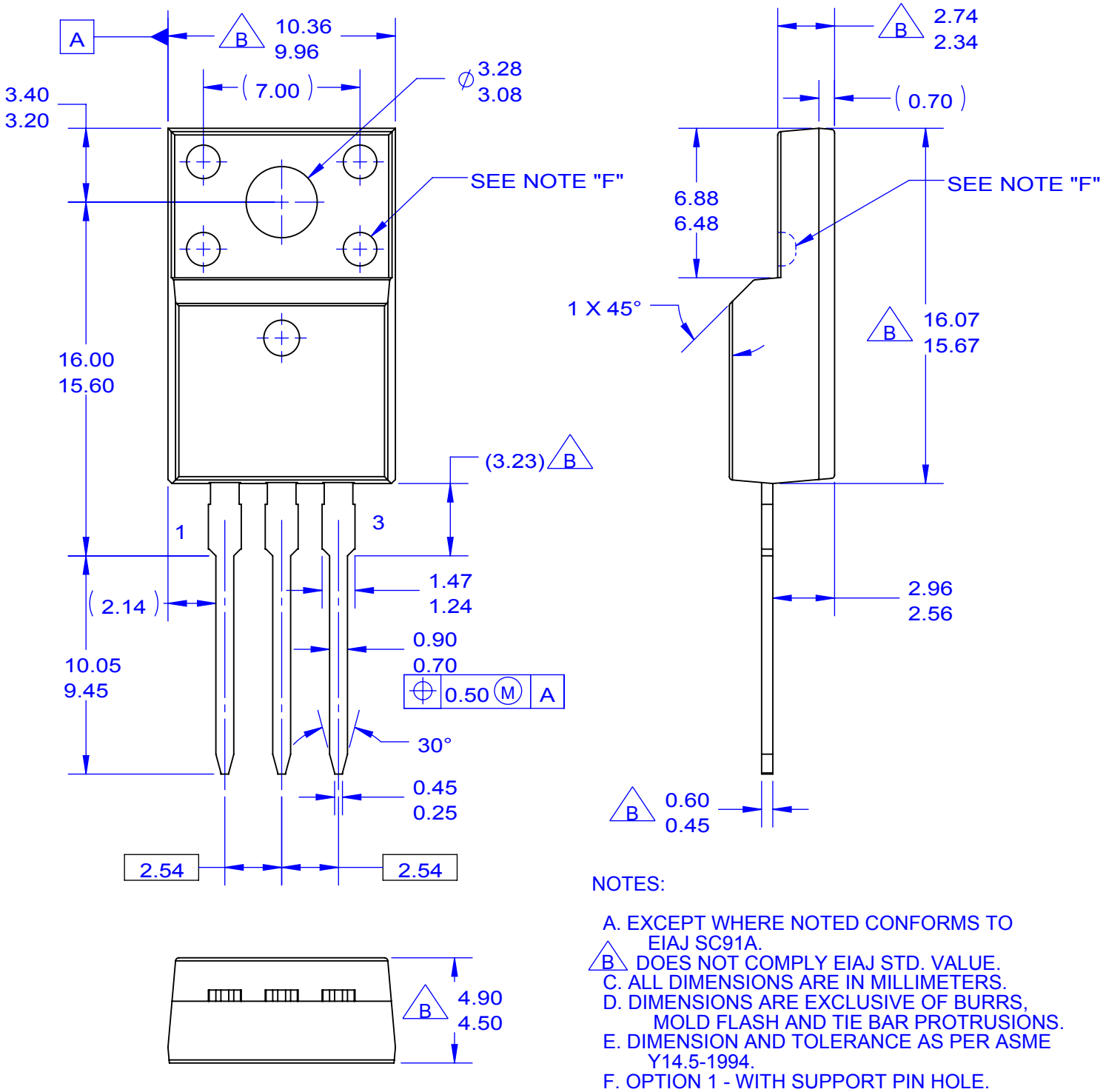

NOTES:

A. EXCEPT WHERE NOTED CONFORMS TO EIAJ SC91A.
B. DOES NOT COMPLY EIAJ STD. VALUE.
C. ALL DIMENSIONS ARE IN MILLIMETERS.
D. DIMENSIONS ARE EXCLUSIVE OF BURRS, MOLD FLASH AND TIE BAR PROTRUSIONS.
E. DIMENSION AND TOLERANCE AS PER ASME Y14.5-1994.
F. OPTION 1 - WITH SUPPORT PIN HOLE.
OPTION 2 - NO SUPPORT PIN HOLE.
G. DRAWING FILE NAME: TO220M03REV3

TRADEMARKS

The following includes registered and unregistered trademarks and service marks, owned by Fairchild Semiconductor and/or its global subsidiaries, and is not intended to be an exhaustive list of all such trademarks.

AccuPower™
AttitudeEngine™
Awinda®
AX-CAP®*
BitSiC™
Build it Now™
CorePLUS™
CorePOWER™
CROSSVOLT™
CTL™
Current Transfer Logic™
DEUXPEED®
Dual Cool™
EcoSPARK®
EfficientMax™
ESBC™
®
Fairchild®
Fairchild Semiconductor®
FACT Quiet Series™
FACT®
FAST®
FastvCore™
FETBench™
FPS™
F-PFS™
FRFET®
Global Power Resource℠
GreenBridge™
Green FPS™
Green FPS™ e-Series™
G*max*™
GTO™
IntelliMAX™
ISOPLANAR™
Making Small Speakers Sound Louder and Better™
MegaBuck™
MICROCOUPLER™
MicroFET™
MicroPak™
MicroPak2™
MillerDrive™
MotionMax™
MotionGrid®
MTi®
MTx®
MVN®
mWSaver®
OptoHiT™
OPTOLOGIC®
OPTOPLANAR®
®
PowerTrench®
PowerXS™
Programmable Active Droop™
QFET®
QS™
Quiet Series™
RapidConfigure™
™
Saving our world, 1mW/W/kW at a time™
SignalWise™
SmartMax™
SMART START™
Solutions for Your Success™
SPM®
STEALTH™
SuperFET®
SuperSOT™-3
SuperSOT™-6
SuperSOT™-8
SupreMOS®
SyncFET™
Sync-Lock™
SYSTEM GENERAL®*
TinyBoost®
TinyBuck®
TinyCalc™
TinyLogic®
TINYOPTO™
TinyPower™
TinyPWM™
TinyWire™
TranSiC™
TriFault Detect™
TRUECURRENT®*
µSerDes™
SerDes™
UHC®
Ultra FRFET™
UniFET™
VCX™
VisualMax™
VoltagePlus™
XS™
Xsens™
仙童™

* Trademarks of System General Corporation, used under license by Fairchild Semiconductor.

DISCLAIMER

FAIRCHILD SEMICONDUCTOR RESERVES THE RIGHT TO MAKE CHANGES WITHOUT FURTHER NOTICE TO ANY PRODUCTS HEREIN TO IMPROVE RELIABILITY, FUNCTION, OR DESIGN. TO OBTAIN THE LATEST, MOST UP-TO-DATE DATASHEET AND PRODUCT INFORMATION, VISIT OUR WEBSITE AT HTTP://WWW.FAIRCHILDSEMI.COM. FAIRCHILD DOES NOT ASSUME ANY LIABILITY ARISING OUT OF THE APPLICATION OR USE OF ANY PRODUCT OR CIRCUIT DESCRIBED HEREIN; NEITHER DOES IT CONVEY ANY LICENSE UNDER ITS PATENT RIGHTS, NOR THE RIGHTS OF OTHERS. THESE SPECIFICATIONS DO NOT EXPAND THE TERMS OF FAIRCHILD'S WORLDWIDE TERMS AND CONDITIONS, SPECIFICALLY THE WARRANTY THEREIN, WHICH COVERS THESE PRODUCTS.

LIFE SUPPORT POLICY

FAIRCHILD'S PRODUCTS ARE NOT AUTHORIZED FOR USE AS CRITICAL COMPONENTS IN LIFE SUPPORT DEVICES OR SYSTEMS WITHOUT THE EXPRESS WRITTEN APPROVAL OF FAIRCHILD SEMICONDUCTOR CORPORATION.

As used herein:

1. Life support devices or systems are devices or systems which, (a) are intended for surgical implant into the body or (b) support or sustain life, and (c) whose failure to perform when properly used in accordance with instructions for use provided in the labeling, can be reasonably expected to result in a significant injury of the user.
2. A critical component in any component of a life support, device, or system whose failure to perform can be reasonably expected to cause the failure of the life support device or system, or to affect its safety or effectiveness.

ANTI-COUNTERFEITING POLICY

Fairchild Semiconductor Corporation's Anti-Counterfeiting Policy. Fairchild's Anti-Counterfeiting Policy is also stated on our external website, www.fairchildsemi.com, under Sales Support.

Counterfeiting of semiconductor parts is a growing problem in the industry. All manufacturers of semiconductor products are experiencing counterfeiting of their parts. Customers who inadvertently purchase counterfeit parts experience many problems such as loss of brand reputation, substandard performance, failed applications, and increased cost of production and manufacturing delays. Fairchild is taking strong measures to protect ourselves and our customers from the proliferation of counterfeit parts. Fairchild strongly encourages customers to purchase Fairchild parts either directly from Fairchild or from Authorized Fairchild Distributors who are listed by country on our web page cited above. Products customers buy either from Fairchild directly or from Authorized Fairchild Distributors are genuine parts, have full traceability, meet Fairchild's quality standards for handling and storage and provide access to Fairchild's full range of up-to-date technical and product information. Fairchild and our Authorized Distributors will stand behind all warranties and will appropriately address any warranty issues that may arise. Fairchild will not provide any warranty coverage or other assistance for parts bought from Unauthorized Sources. Fairchild is committed to combat this global problem and encourage our customers to do their part in stopping this practice by buying direct or from authorized distributors.

PRODUCT STATUS DEFINITIONS

Definition of Terms

Datasheet Identification	Product Status	Definition
Advance Information	Formative / In Design	Datasheet contains the design specifications for product development. Specifications may change in any manner without notice.
Preliminary	First Production	Datasheet contains preliminary data; supplementary data will be published at a later date. Fairchild Semiconductor reserves the right to make changes at any time without notice to improve design.
No Identification Needed	Full Production	Datasheet contains final specifications. Fairchild Semiconductor reserves the right to make changes at any time without notice to improve the design.
Obsolete	Not In Production	Datasheet contains specifications on a product that is discontinued by Fairchild Semiconductor. The datasheet is for reference information only.

Rev. I73

© Fairchild Semiconductor Corporation