Notice: You cannot copy or search for text in this PDF file, because this PDF file is converted from the scanned image of printed materials.

NEC

MOS FIELD EFFECT POWER TRANSISTORS
2SK2134, 2SK2134-Z

SWITCHING
N-CHANNEL POWER MOS FET
INDUSTRIAL USE

DESCRIPTION

The 2SK2134, 2SK2134-Z are N-channel Power MOS Field Effect Transistors designed for high voltage switching applications.

FEATURES

- Low On-state Resistance
  $R_{DS(on)}$ = 0.4 Ω MAX. (V_{GS} = 10 V, I_D = 7.0 A)
- Low C_{iss} C_{iss} = 500 pF TYP.
- High Avalanche Capability Ratings

QUALITY GRADE

Standard

Please refer to "Quality grade on NEC Semiconductor Devices" (Document number IEI-1209) published by NEC Corporation to know the specification of quality grade on the devices and its recommended applications.

ABSOLUTE MAXIMUM RATINGS

Drain to Source Voltage	V_{DSS}	200	V
Gate to Source Voltage	V_{GSS}	±30	V
Drain Current (DC)	$I_{D(DS)}$	±13	A
Drain Current (pulse)	$I_{D(pulse)}$*	±39	A
Single Avalanche Current**	I_{AS}	13	A
Single Avalanche Energy**	E_{AS}	33.8	mJ
Total Power Dissipation (T_a = 25 °C)	P_{T1}	1.5	W
Total Power Dissipation (T_c = 25 °C)	P_{T2}	70	W
Storage Temperature	T_{stg}	−55 to +150	°C
Channel Temperature	T_{ch}	150	°C

* PW ≦ 10 μs, Duty Cycle ≦ 1 %

** Starting T_{ch} = 25 °C, R_G = 25 Ω, V_{GS} = 20 V → 0

PACKAGE DIMENSIONS
(Unit : mm)

2SK2134

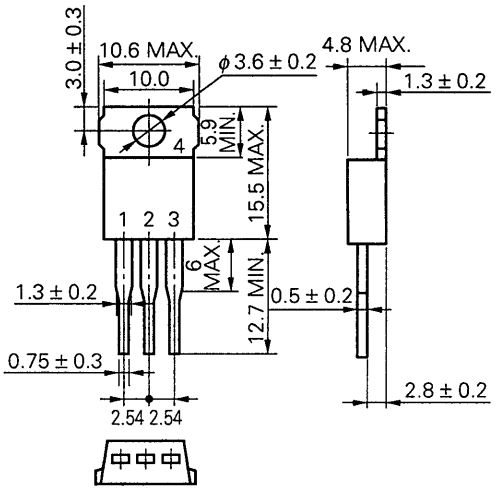

MP–25 (TO–220AB)

2SK2134-Z

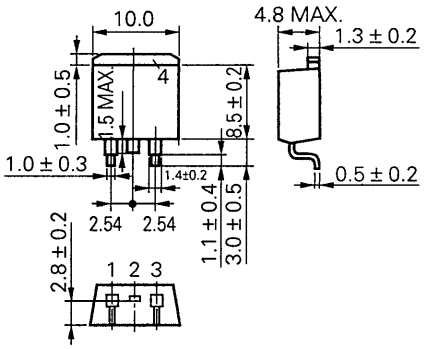

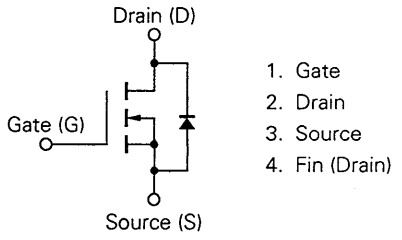

(Diode in the figure is the parasitic diode)

Document No. TC–2466
(O.D. No. TC–7997)
Date Published November 1993 M
Printed in Japan

© NEC Corporation 1993

ELECTRICAL CHARACTERISTICS (T_a = 25 °C)

CHARACTERISTIC	SYMBOL	MIN.	TYP.	MAX.	UNIT	TEST CONDITIONS
Drain to Source On-state Resistance	R_{DS} (on)		0.3	0.4	Ω	V_{GS} = 10 V, I_D = 7.0 A
Gate to Source Cutoff Voltage	V_{GS} (off)	2.0		4.0	V	V_{DS} = 10 V, I_D = 1 mA
Forward Transfer Admittance	$\|y_{fs}\|$	2.0			S	V_{DS} = 10 V, I_D = 7.0 A
Drain Leakage Current	I_{DSS}			100	μA	V_{DS} = 200 V, V_{GS} = 0
Gate to Source Leakage Current	I_{GSS}			±100	nA	V_{GS} = ±30 V, V_{DS} = 0
Input Capacitance	C_{iss}		500		pF	V_{DS} = 10 V V_{GS} = 0 f = 1 MHz
Output Capacitance	C_{oss}		230		pF	
Reverse Transfer Capacitance	C_{rss}		60		pF	
Turn-On Delay Time	t_{d} (on)		12		ns	V_{GS} = 10 V V_{DD} = 100 V I_D = 7.0 A, R_G = 10 Ω R_L = 14.3 Ω
Rise Time	t_r		45		ns	
Turn-Off Delay Time	t_{d} (off)		35		ns	
Fall Time	t_f		12		ns	
Total Gate Charge	Q_G		15		nC	V_{GS} = −10 V I_D = 13 A V_{DD} = 160 V
Gate to Source Charge	Q_{GS}		5.0		nC	
Gate to Drain Charge	Q_{GD}		8.0		nC	
Diode Forward Voltage	$V_{F(S-D)}$		1.0		V	I_F = 13 A, V_{GS} = 0
Reverse Recovery Time	t_{rr}		200		ns	I_F = 13 A di/dt = 50 A/μs
Reverse Recovery Charge	Q_{rr}		0.6		μC	

Test Circuit 1 : Avalanche Capability

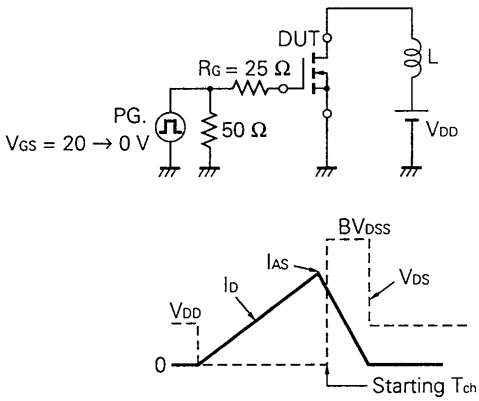

Test Circuit 2 : Switching Time

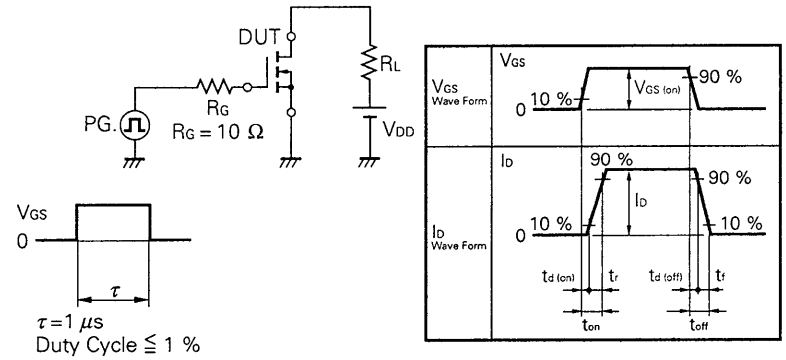

Test Circuit 3 : Gate Charge

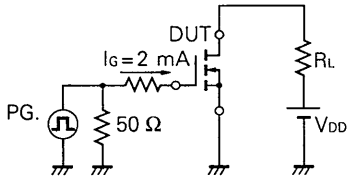

TYPICAL CHARACTERISTICS (T_a = 25 °C)

DERATING FACTOR OF FORWARD BIAS SAFE OPERATING AREA

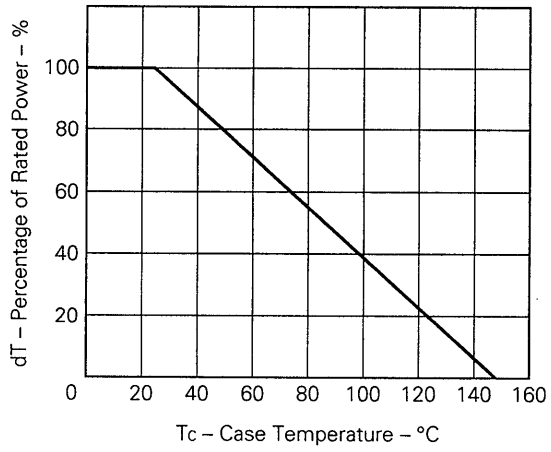

TOTAL POWER DISSIPATION vs. CASE TEMPERATURE

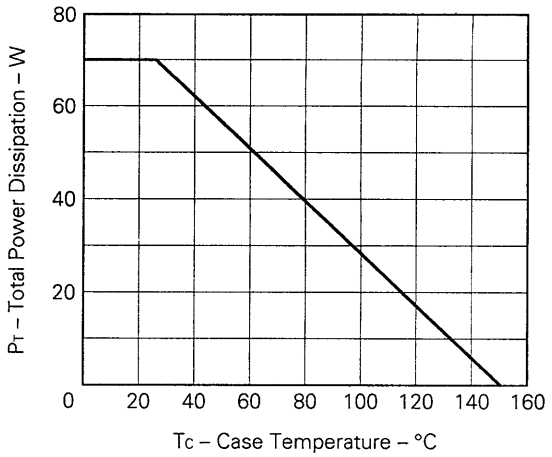

FORWARD BIAS SAFE OPERATING AREA

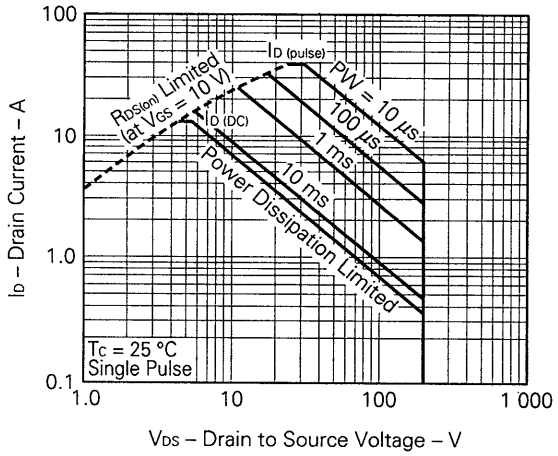

DRAIN CURRENT vs. DRAIN TO SOURCE VOLTAGE

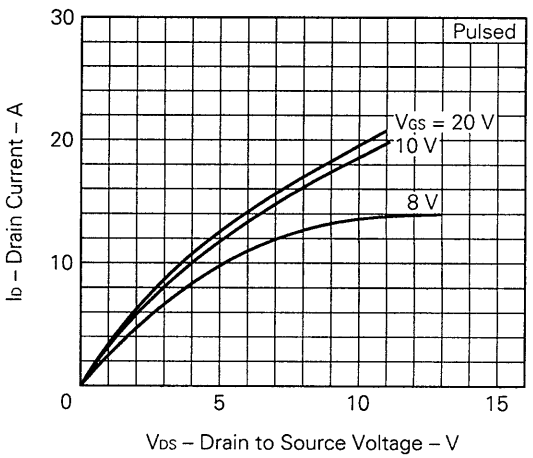

TRANSFER CHARACTERISTICS

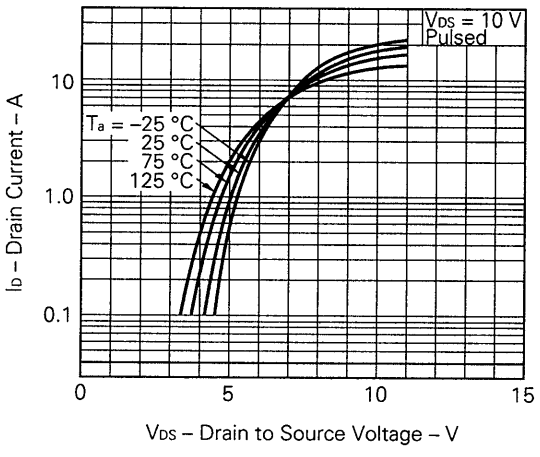

TRANSIENT THERMAL RESISTANCE vs. PULSE WIDTH

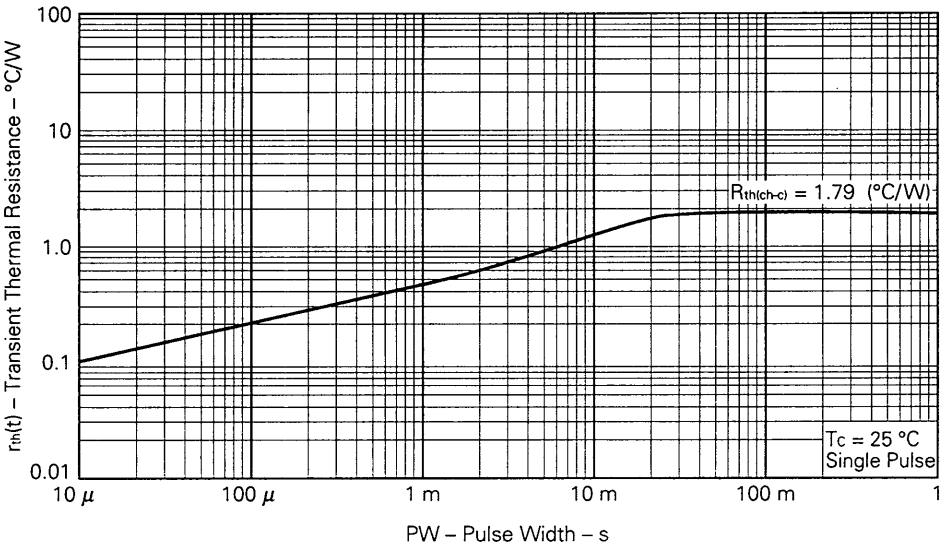

FORWARD TRANSFER ADMITTANCE vs. DRAIN CURRENT

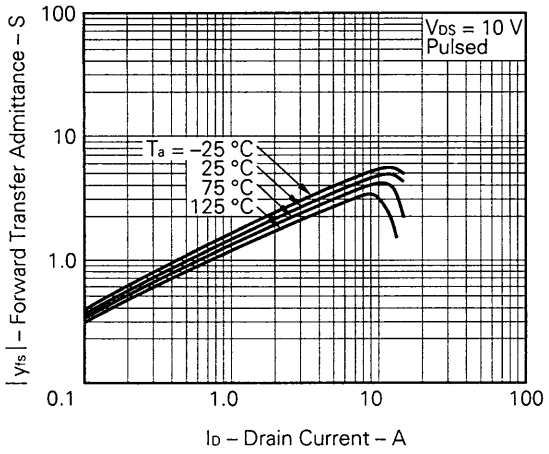

DRAIN TO SOURCE ON-STATE RESISTANCE vs. GATE TO SOURCE VOLTAGE

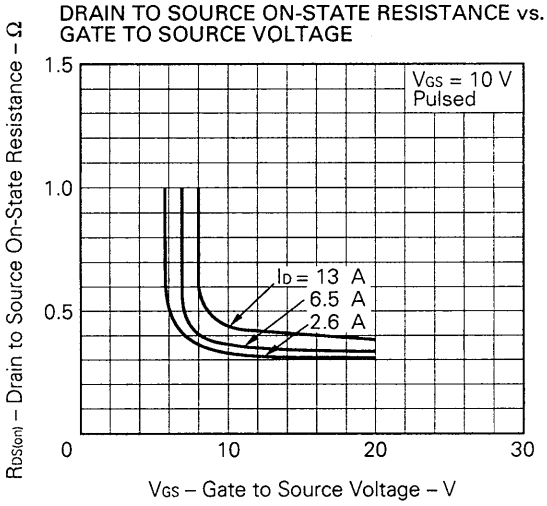

DRAIN TO SOURCE ON-STATE RESISTANCE vs. DRAIN CURRENT

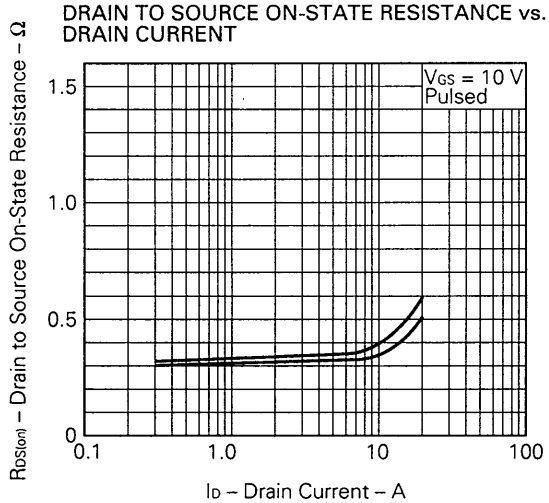

GATE TO SOURCE CUTOFF VOLTAGE vs. CHANNEL TEMPERATURE

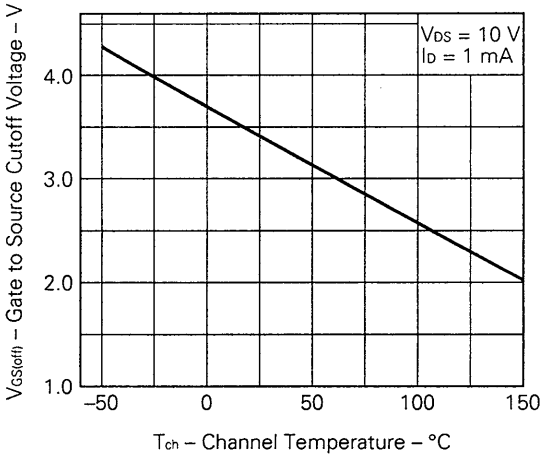

DRAIN TO SOURCE ON-STATE RESISTANCE vs. CHANNEL TEMPERATURE

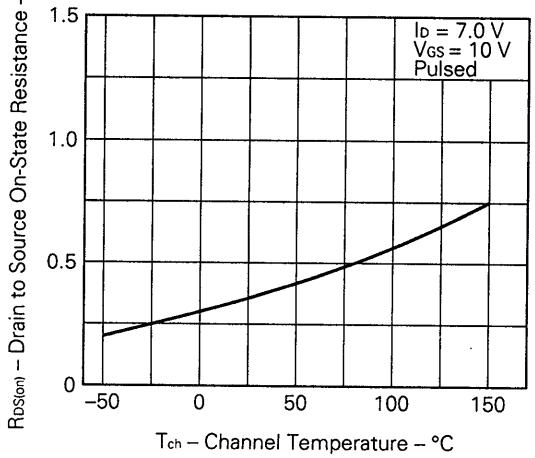

SOURCE TO DRAIN DIODE FORWARD VOLTAGE

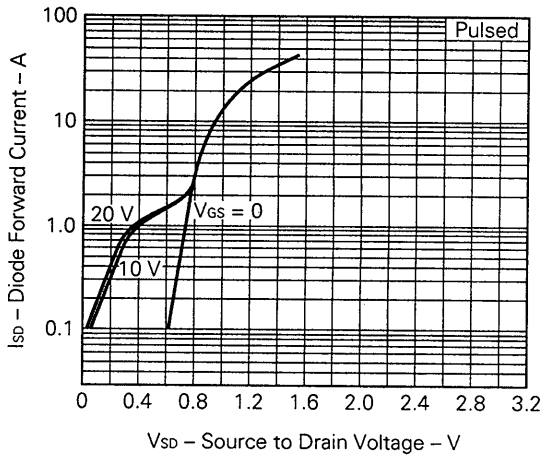

CAPACITANCE vs. DRAIN TO SOURCE VOLTAGE

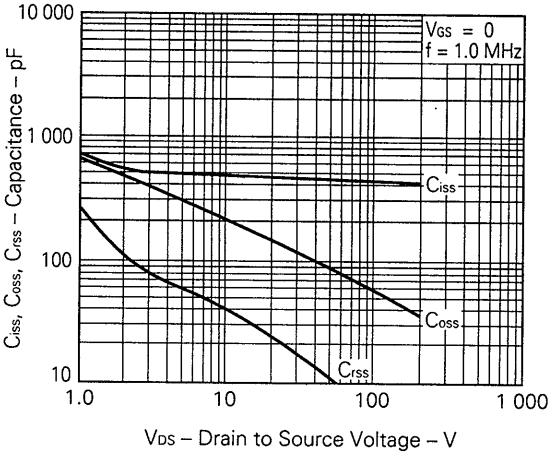

SWITCHING CHARACTERISTICS

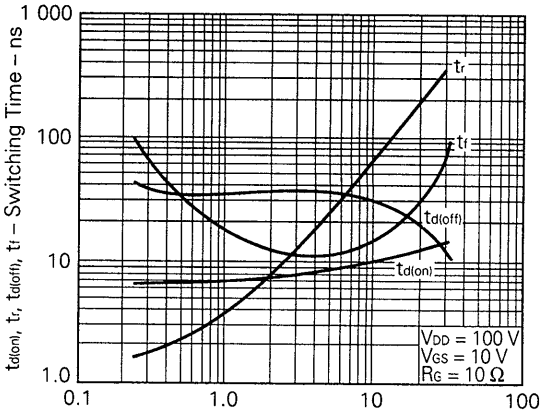

DYNAMIC INPUT/OUTPUT CHARACTERISTICS

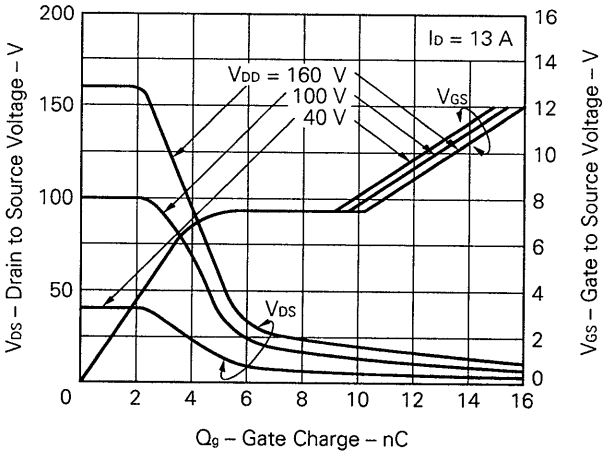

REVERSE RECOVERY TIME vs. REVERSE DRAIN CURRENT

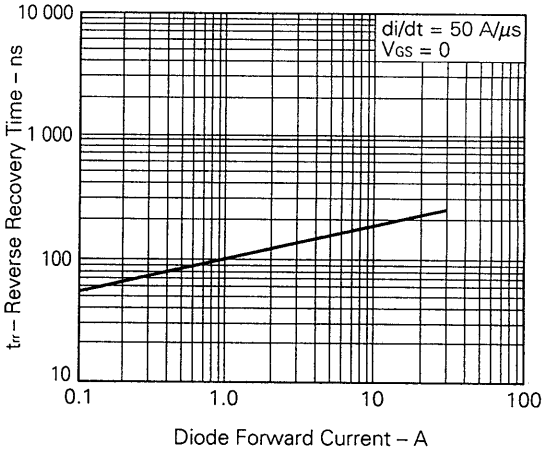

SINGLE AVALANCHE CURRENT vs.
INDUCTIVE LOAD

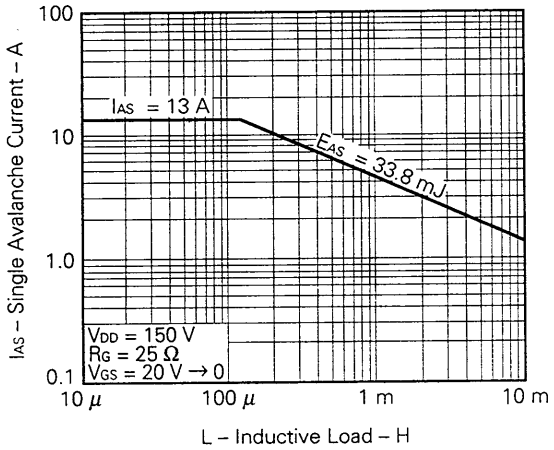

SINGLE AVALANCHE ENERGY vs.
STARTING CHANNEL TEMPERATURE

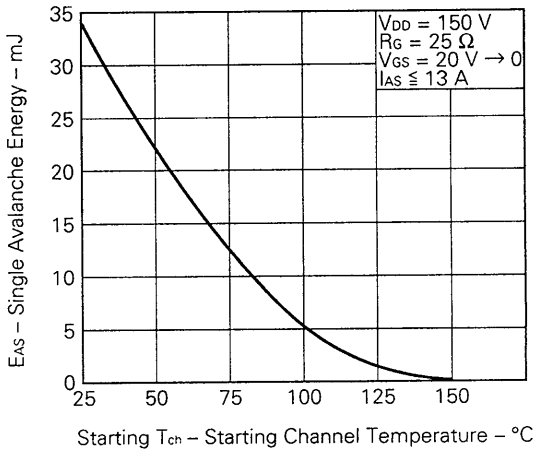

Reference

Application note name	No.
Safe operating area of Power MOS FET.	TEA-1034
Application circuit using Power MOS FET.	TEA-1035
Quality control of NEC semiconductors devices.	TEI-1202
Quality control guide of semiconductors devices.	MEI-1202
Assembly manual of semiconductors devices.	IEI-1207

[MEMO]

No part of this document may be copied or reproduced in any form or by any means without the prior written consent of NEC Corporation.NEC Corporation assumes no responsibility for any errors which may appear in this document.

NEC Corporation does not assume any liability for infringement of patents, copyrights or other intellectual property rights of third parties by or arising from use of a device described herein or any other liability arising from use of such device. No license, either express, implied or otherwise, is granted under any patents, copyrights or other intellectual property rights of NEC Corporation or others.

The devices listed in this document are not suitable for use in aerospace equipment, submarine cables, nuclear reactor control systems and life support systems. If customers intend to use NEC devices for above applications or they intend to use "Standard" quality grade NEC devices for applications not intended by NEC, please contact our sales people in advance.

Application examples recommended by NEC Corporation.

Standard: Computer, Office equipment, Communication equipment, Test and Measurement equipment, Machine tools, Industrial robots, Audio and Visual equipment, Other consumer products, etc.

Special: Automotive and Transportation equipment, Traffic control systems, Antidisaster systems, Anticrime systems, etc.

M4 92.6