STB18N65M5, STD18N65M5
STF18N65M5, STP18N65M5

N-channel 650 V, 0.198 Ω, 15 A MDmesh™ V Power MOSFET in D²PAK, DPAK, TO-220FP and TO-220 packages

Preliminary data

Features

Order code	V_{DSS} @ T_{Jmax}	$R_{DS(on)}$ max	I_D
STB18N65M5	710 V	< 0.22 Ω	15 A
STD18N65M5			
STF18N65M5			
STP18N65M5			

- Worldwide best $R_{DS(on)}$ * area
- Higher V_{DSS} rating and high dv/dt capability
- Excellent switching performance
- 100% avalanche tested

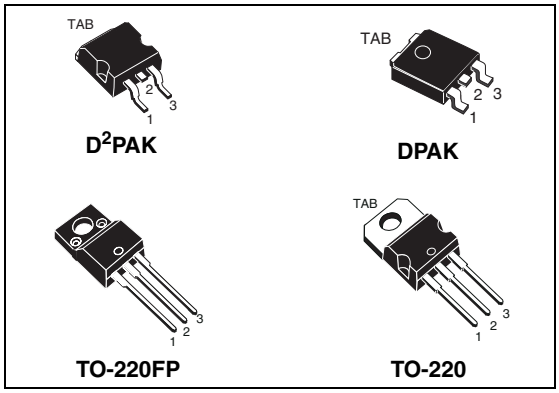

Applications

- Switching applications

Description

These devices are N-channel MDmesh™ V Power MOSFETs based on an innovative proprietary vertical process technology, which is combined with STMicroelectronics' well-known PowerMESH™ horizontal layout structure. The resulting product has extremely low on-resistance, which is unmatched among silicon-based Power MOSFETs, making it especially suitable for applications which require superior power density and outstanding efficiency.

Figure 1. Internal schematic diagram

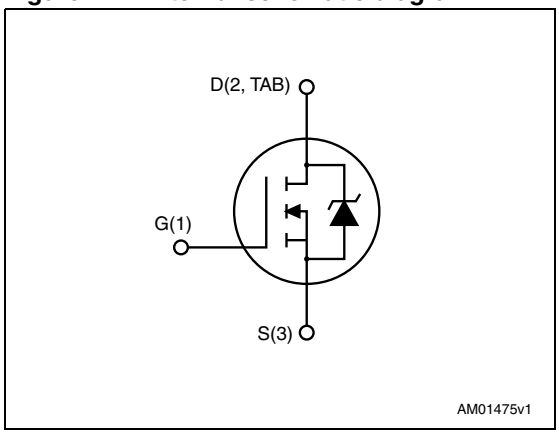

Table 1. Device summary

Order code	Marking	Package	Packaging
STB18N65M5	18N65M5	D²PAK	Tape and reel
STD18N65M5		DPAK	
STF18N65M5		TO-220FP	Tube
STP18N65M5		TO-220	

This is preliminary information on a new product now in development or undergoing evaluation. Details are subject to change without notice.

www.st.com

Downloaded from Elcodis.com electronic components distributor

Contents

1 Electrical ratings 3

2 Electrical characteristics 4

3 Test circuits 6

4 Package mechanical data 7

5 Packaging mechanical data 14

6 Revision history 17

Downloaded from Elcodis.com electronic components distributor

1 Electrical ratings

Table 2. Absolute maximum ratings

Symbol	Parameter	Value		Unit
		D^2PAK, DPAK, TO-220	TO-220FP	
V_{GS}	Gate-source voltage	± 25		V
I_D	Drain current (continuous) at T_C = 25 °C	15	15 (1)	A
I_D	Drain current (continuous) at T_C = 100 °C	9.4	9.4 (1)	A
I_{DM} (1)	Drain current (pulsed)	60	60 (1)	A
P_{TOT}	Total dissipation at T_C = 25 °C	110	30	W
dv/dt (2)	Peak diode recovery voltage slope	15		V/ns
V_{ISO}	Insulation withstand voltage (RMS) from all three leads to external heat sink (t = 1 s; Tc = 25 °C)		2500	V
T_{stg}	Storage temperature	- 55 to 150		°C
T_j	Max. operating junction temperature	150		°C

1. Limited by maximum junction temperature.
2. I_{SD} ≤ 15 A, di/dt ≤400 A/µs; V_{DD} < 80 % $V_{(BR)DSS}$

Table 3. Thermal data

Symbol	Parameter	Value				Unit
		D^2PAK	DPAK	TO-220FP	TO-220	
$R_{thj\text{-}case}$	Thermal resistance junction-case max	1.14		4.2	1.14	°C/W
$R_{thj\text{-}pcb}$ (1)	Thermal resistance junction-pcb max	30	50	-		°C/W
$R_{thj\text{-}amb}$	Thermal resistance junction-ambient max			62.5		°C/W

1. When mounted on 1 inch² FR-4, 2 Oz copper board.

Table 4. Avalanche characteristics

Symbol	Parameter	Value	Unit
I_{AR}	Avalanche current, repetetive or not repetetive (pulse width limited by T_{jmax})	TBD	A
E_{AS}	Single pulse avalanche energy (starting t_j=25°C, I_d= I_{AR}; V_{dd}=50)	TBD	mJ

Downloaded from Elcodis.com electronic components distributor

2 Electrical characteristics

(T_C = 25 °C unless otherwise specified)

Table 5. On /off states

Symbol	Parameter	Test conditions	Min.	Typ.	Max.	Unit
$V_{(BR)DSS}$	Drain-source breakdown voltage	I_D = 1 mA, V_{GS} = 0	650			V
I_{DSS}	Zero gate voltage drain current (V_{GS} = 0)	V_{DS} = 650 V V_{DS} = 650 V, T_C=125 °C			1 100	µA µA
I_{GSS}	Gate-body leakage current (V_{DS} = 0)	V_{GS} = ± 25 V			± 100	nA
$V_{GS(th)}$	Gate threshold voltage	V_{DS} = V_{GS}, I_D = 250 µA	3	4	5	V
$R_{DS(on)}$	Static drain-source on-resistance	V_{GS} = 10 V, I_D = 7.5 A		0.198	0.22	Ω

Table 6. Dynamic

Symbol	Parameter	Test conditions	Min.	Typ.	Max.	Unit
C_{iss} C_{oss} C_{rss}	Input capacitance Output capacitance Reverse transfer capacitance	V_{DS} = 100 V, f = 1 MHz, V_{GS} = 0	-	1125 33 6	-	pF pF pF
$C_{o(tr)}$(1)	Equivalent capacitance time related	V_{DS} = 0 to 520 V, V_{GS} = 0	-	TBD	-	pF
$C_{o(er)}$(2)	Equivalent capacitance energy related		-	TBD	-	pF
R_G	Intrinsic gate resistance	f = 1 MHz open drain	-	2.2	-	Ω
Q_g Q_{gs} Q_{gd}	Total gate charge Gate-source charge Gate-drain charge	V_{DD} = 520 V, I_D = 7.5 A, V_{GS} = 10 V (see *Figure 3*)	-	34 9 13	-	nC nC nC

1. Time related is defined as a constant equivalent capacitance giving the same charging time as C_{oss} when V_{DS} increases from 0 to 80% V_{DSS}
2. Energy related is defined as a constant equivalent capacitance giving the same stored energy as C_{oss} when V_{DS} increases from 0 to 80% V_{DSS}

Downloaded from Elcodis.com electronic components distributor

Table 7. Switching times

Symbol	Parameter	Test conditions	Min.	Typ.	Max	Unit
$t_{d(on)}$	Voltage delay time	V_{DD} = 400 V, I_D = 9.5 A, R_G = 4.7 Ω, V_{GS} = 10 V (see *Figure 4* and *Figure 7*)	-	TBD	-	ns
t_r	Voltage rise time			TBD		ns
t_f	Current fall time			TBD		ns
$t_{c(off)}$	Crossing time			TBD		ns

Table 8. Source drain diode

Symbol	Parameter	Test conditions	Min.	Typ.	Max.	Unit
I_{SD}	Source-drain current		-		15	A
I_{SDM} (1)	Source-drain current (pulsed)				60	A
V_{SD} (2)	Forward on voltage	I_{SD} = 15 A, V_{GS} = 0	-		1.5	V
t_{rr}	Reverse recovery time	I_{SD} = 15 A, di/dt = 100 A/µs V_{DD} = 100 V (see *Figure 7*)	-	TBD		ns
Q_{rr}	Reverse recovery charge			TBD		µC
I_{RRM}	Reverse recovery current			TBD		A
t_{rr}	Reverse recovery time	I_{SD} = 15 A, di/dt = 100 A/µs V_{DD} = 100 V, T_j = 150 °C (see *Figure 7*)	-	TBD		ns
Q_{rr}	Reverse recovery charge			TBD		µC
I_{RRM}	Reverse recovery current			TBD		A

1. Pulse width limited by safe operating area.
2. Pulsed: pulse duration = 300 µs, duty cycle 1.5%

Downloaded from Elcodis.com electronic components distributor

3 Test circuits

Figure 2. Switching times test circuit for resistive load

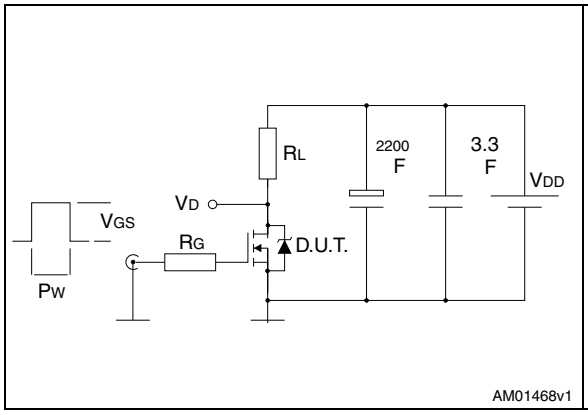

Figure 3. Gate charge test circuit

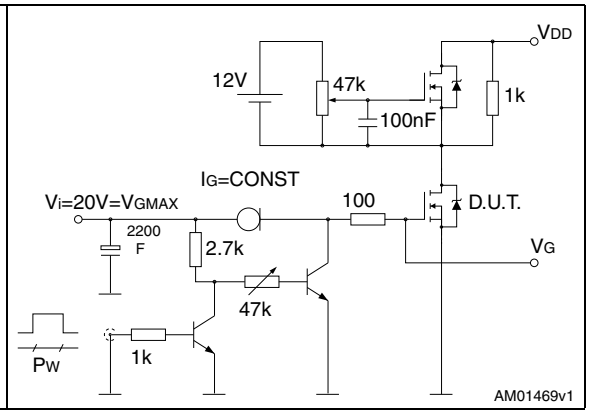

Figure 4. Test circuit for inductive load switching and diode recovery times

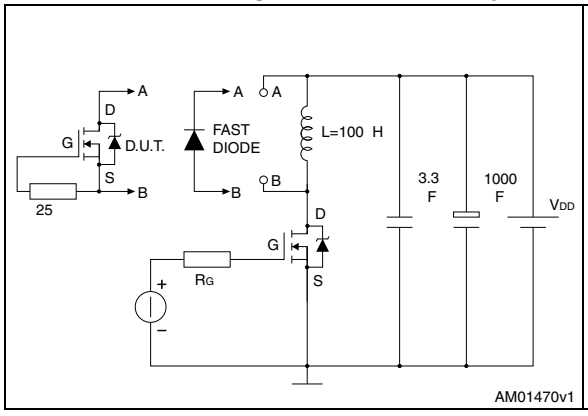

Figure 5. Unclamped inductive load test circuit

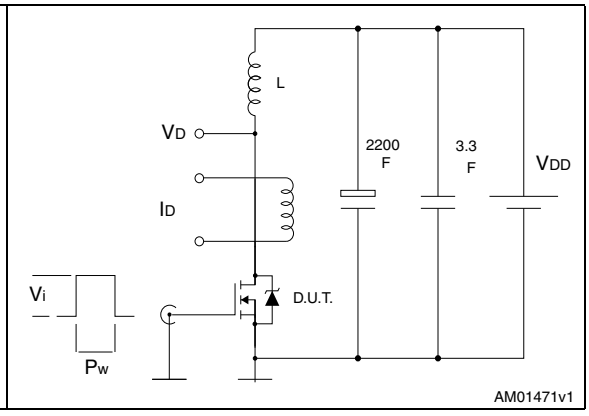

Figure 6. Unclamped inductive waveform

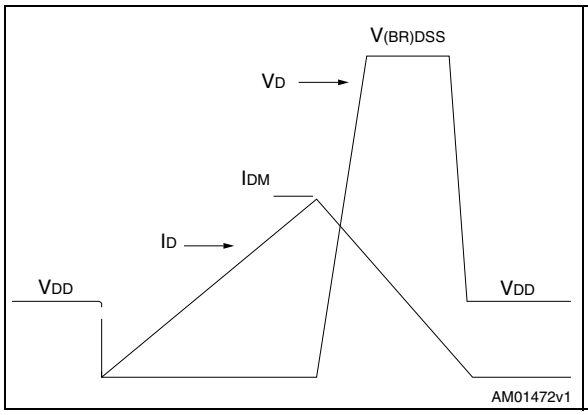

Figure 7. Switching time waveform

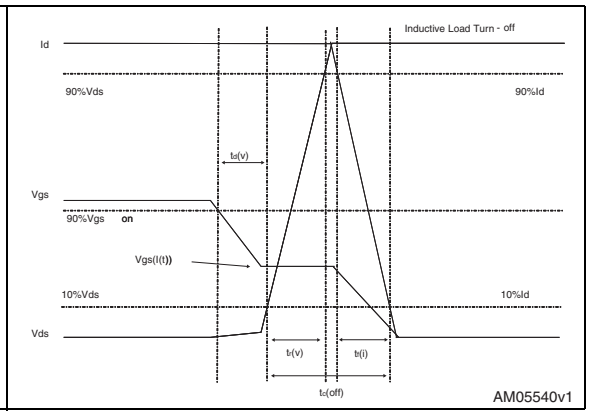

Downloaded from Elcodis.com electronic components distributor

4 Package mechanical data

In order to meet environmental requirements, ST offers these devices in different grades of ECOPACK® packages, depending on their level of environmental compliance. ECOPACK® specifications, grade definitions and product status are available at: www.st.com. ECOPACK is an ST trademark.

Table 9. D²PAK (TO-263) mechanical data

Dim.	mm		
	Min.	Typ.	Max.
A	4.40		4.60
A1	0.03		0.23
b	0.70		0.93
b2	1.14		1.70
c	0.45		0.60
c2	1.23		1.36
D	8.95		9.35
D1	7.50		
E	10		10.40
E1	8.50		
e		2.54	
e1	4.88		5.28
H	15		15.85
J1	2.49		2.69
L	2.29		2.79
L1	1.27		1.40
L2	1.30		1.75
R		0.4	
V2	0°		8°

Downloaded from Elcodis.com electronic components distributor

Figure 8. D²PAK (TO-263) drawing

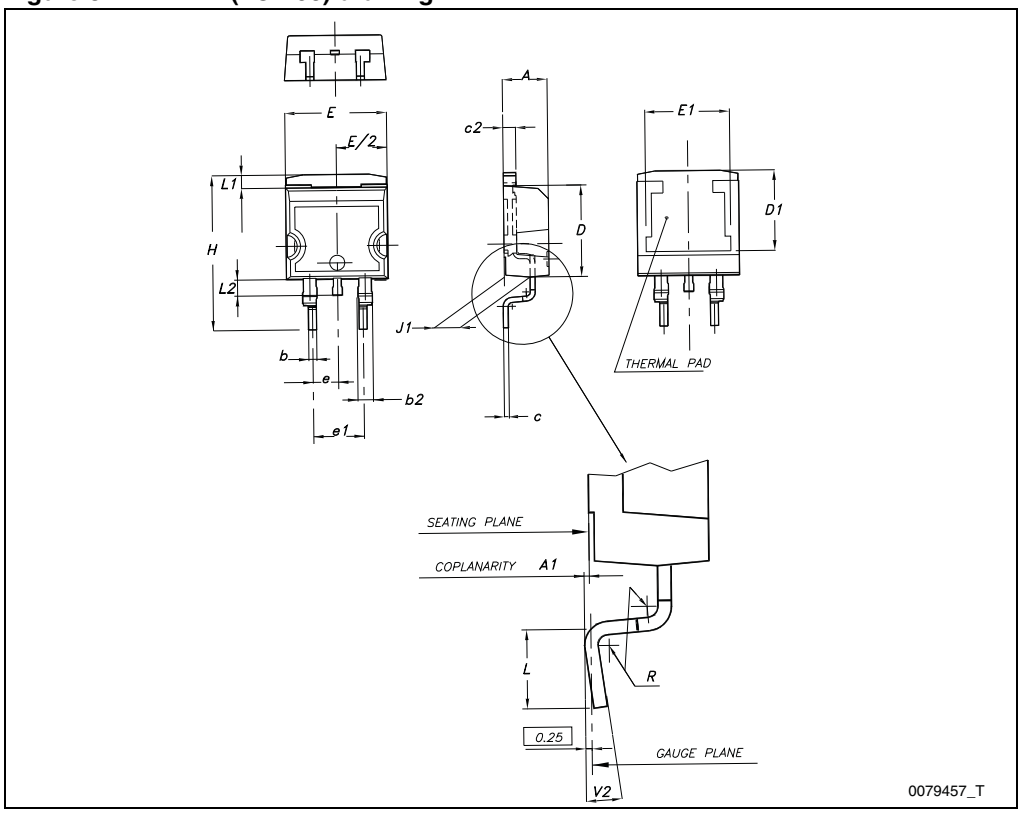

Figure 9. D²PAK footprint[a]

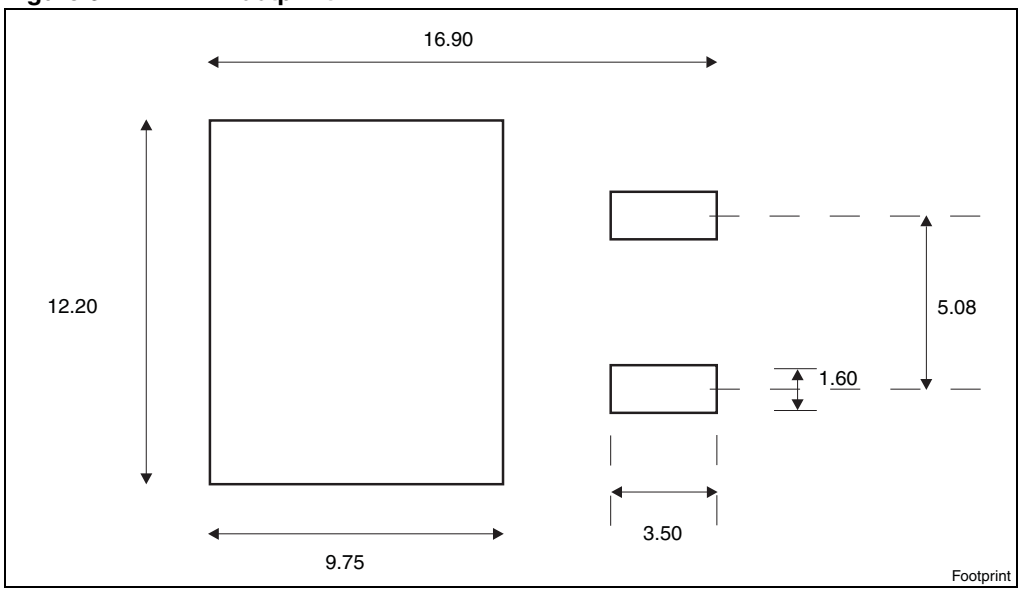

a. All dimension are in millimeters

Downloaded from Elcodis.com electronic components distributor

Table 10. DPAK (TO-252) mechanical data

Dim.	mm		
	Min.	Typ.	Max.
A	2.20		2.40
A1	0.90		1.10
A2	0.03		0.23
b	0.64		0.90
b4	5.20		5.40
c	0.45		0.60
c2	0.48		0.60
D	6.00		6.20
D1		5.10	
E	6.40		6.60
E1		4.70	
e		2.28	
e1	4.40		4.60
H	9.35		10.10
L	1		1.50
L1		2.80	
L2		0.80	
L4	0.60		1
R		0.20	
V2	0°		8°

Downloaded from Elcodis.com electronic components distributor

Figure 10. DPAK (TO-252) drawing

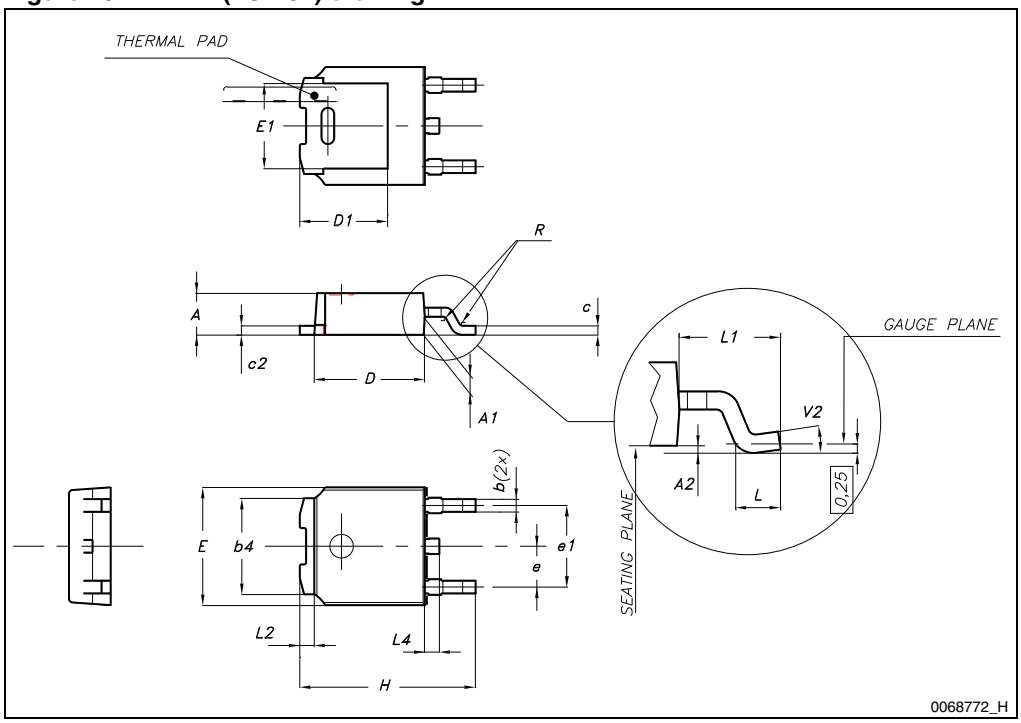

Figure 11. DPAK footprint[b]

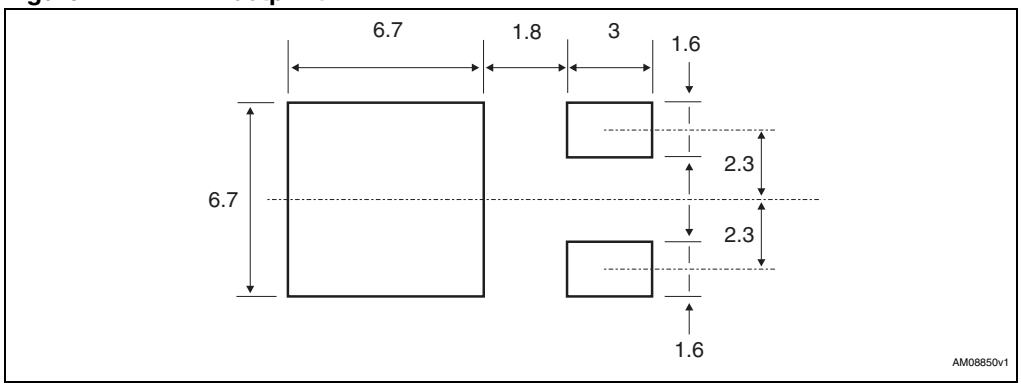

b. All dimensions are in millimeters

Downloaded from Elcodis.com electronic components distributor

Table 11. TO-220FP mechanical data

Dim.	mm		
	Min.	Typ.	Max.
A	4.4		4.6
B	2.5		2.7
D	2.5		2.75
E	0.45		0.7
F	0.75		1
F1	1.15		1.70
F2	1.15		1.70
G	4.95		5.2
G1	2.4		2.7
H	10		10.4
L2		16	
L3	28.6		30.6
L4	9.8		10.6
L5	2.9		3.6
L6	15.9		16.4
L7	9		9.3
Dia	3		3.2

Figure 12. TO-220FP drawing

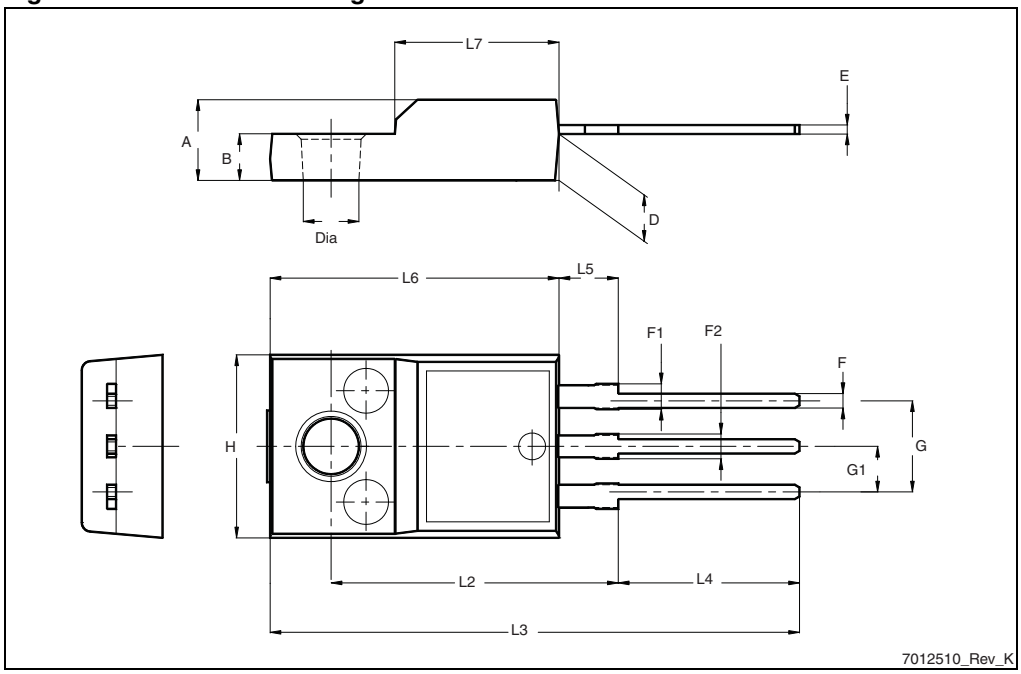

Downloaded from Elcodis.com electronic components distributor

Table 12. TO-220 type A mechanical data

Dim.	mm		
	Min.	Typ.	Max.
A	4.40		4.60
b	0.61		0.88
b1	1.14		1.70
c	0.48		0.70
D	15.25		15.75
D1		1.27	
E	10		10.40
e	2.40		2.70
e1	4.95		5.15
F	1.23		1.32
H1	6.20		6.60
J1	2.40		2.72
L	13		14
L1	3.50		3.93
L20		16.40	
L30		28.90	
∅P	3.75		3.85
Q	2.65		2.95

Downloaded from Elcodis.com electronic components distributor

Figure 13. TO-220 type A drawing

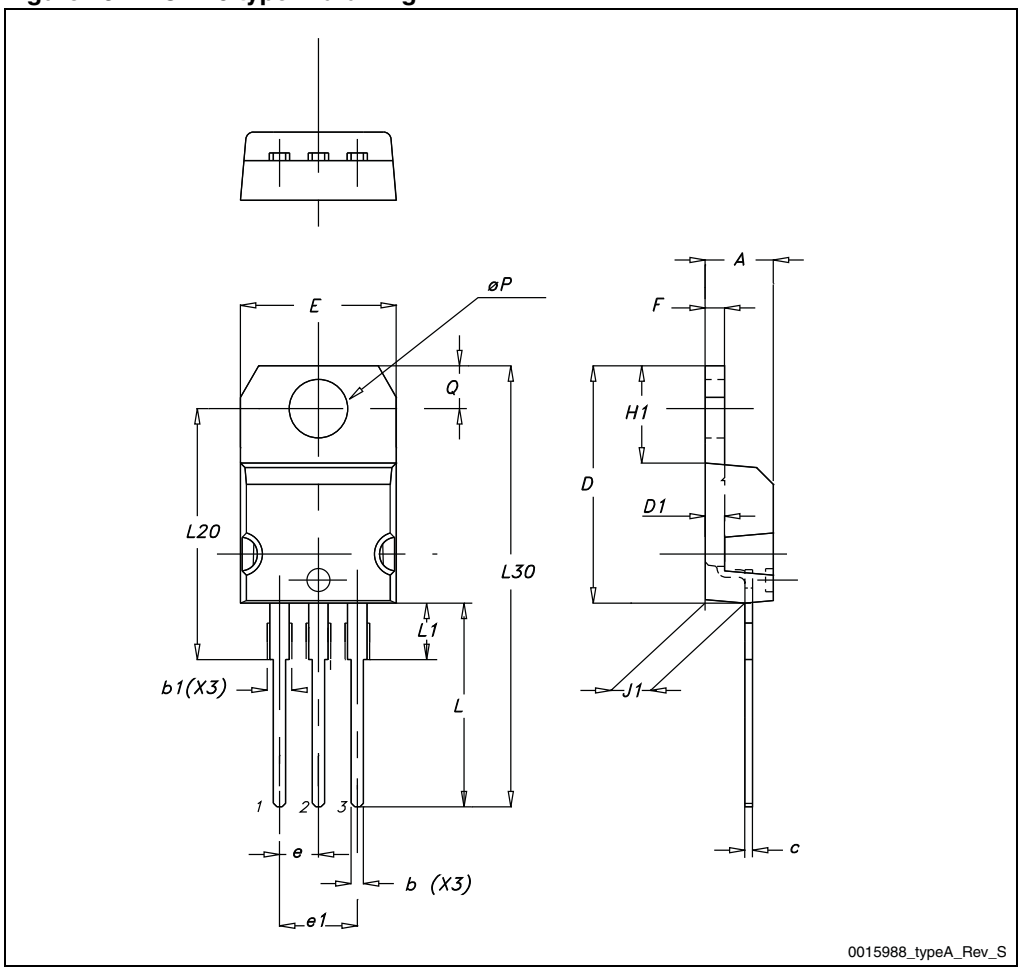

Downloaded from Elcodis.com electronic components distributor

5 Packaging mechanical data

Table 13. DPAK (TO-252) tape and reel mechanical data

Tape			Reel		
Dim.	mm		Dim.	mm	
	Min.	Max.		Min.	Max.
A0	6.8	7	A		330
B0	10.4	10.6	B	1.5	
B1		12.1	C	12.8	13.2
D	1.5	1.6	D	20.2	
D1	1.5		G	16.4	18.4
E	1.65	1.85	N	50	
F	7.4	7.6	T		22.4
K0	2.55	2.75			
P0	3.9	4.1	Base qty.		2500
P1	7.9	8.1	Bulk qty.		2500
P2	1.9	2.1			
R	40				
T	0.25	0.35			
W	15.7	16.3			

Table 14. D²PAK (TO-263) tape and reel mechanical data

Tape			Reel		
Dim.	mm		Dim.	mm	
	Min.	Max.		Min.	Max.
A0	10.5	10.7	A		330
B0	15.7	15.9	B	1.5	
D	1.5	1.6	C	12.8	13.2
D1	1.59	1.61	D	20.2	
E	1.65	1.85	G	24.4	26.4
F	11.4	11.6	N	100	
K0	4.8	5.0	T		30.4
P0	3.9	4.1			
P1	11.9	12.1	Base qty		1000
P2	1.9	2.1	Bulk qty		1000

Downloaded from Elcodis.com electronic components distributor

Table 14. D²PAK (TO-263) tape and reel mechanical data (continued)

Tape			Reel		
Dim.	mm		Dim.	mm	
	Min.	Max.		Min.	Max.
R	50				
T	0.25	0.35			
W	23.7	24.3			

Figure 14. Tape

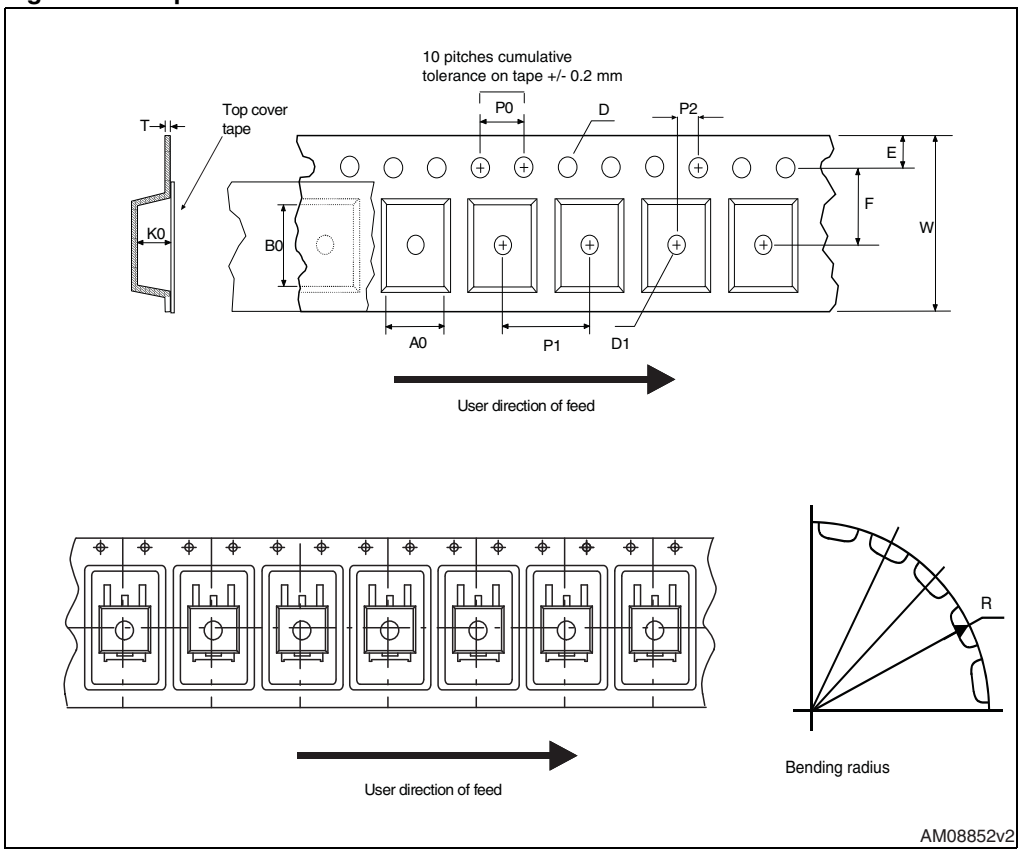

Downloaded from Elcodis.com electronic components distributor

Figure 15. Reel

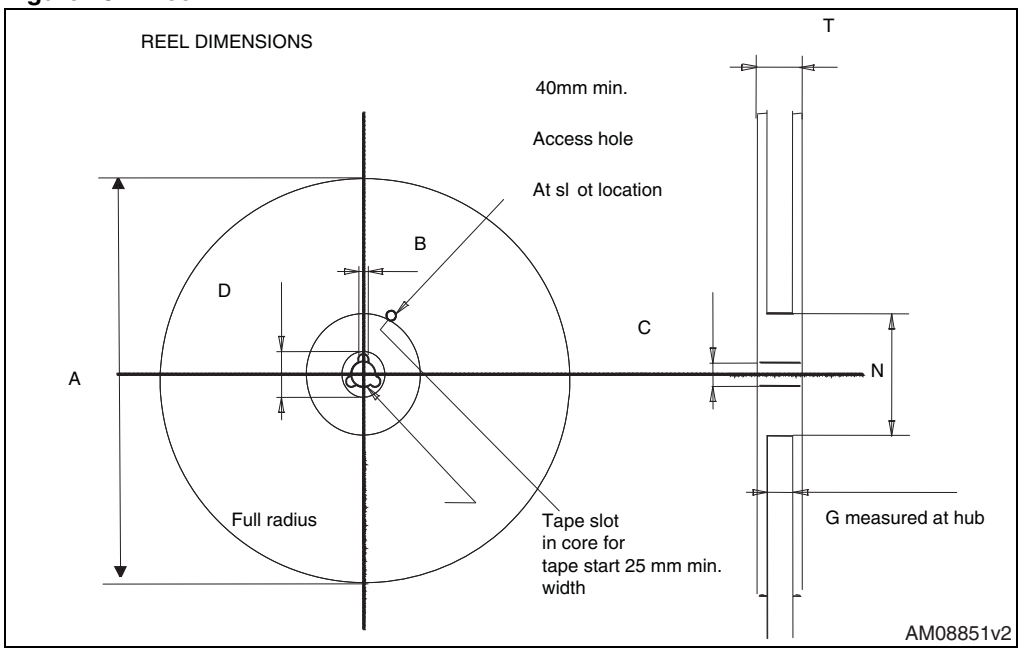

Downloaded from Elcodis.com electronic components distributor

6 Revision history

Table 15. Document revision history

Date	Revision	Changes
01-Mar-2012	1	First release.

Downloaded from Elcodis.com electronic components distributor

Please Read Carefully:

Information in this document is provided solely in connection with ST products. STMicroelectronics NV and its subsidiaries (“ST”) reserve the right to make changes, corrections, modifications or improvements, to this document, and the products and services described herein at any time, without notice.

All ST products are sold pursuant to ST’s terms and conditions of sale.

Purchasers are solely responsible for the choice, selection and use of the ST products and services described herein, and ST assumes no liability whatsoever relating to the choice, selection or use of the ST products and services described herein.

No license, express or implied, by estoppel or otherwise, to any intellectual property rights is granted under this document. If any part of this document refers to any third party products or services it shall not be deemed a license grant by ST for the use of such third party products or services, or any intellectual property contained therein or considered as a warranty covering the use in any manner whatsoever of such third party products or services or any intellectual property contained therein.

UNLESS OTHERWISE SET FORTH IN ST’S TERMS AND CONDITIONS OF SALE ST DISCLAIMS ANY EXPRESS OR IMPLIED WARRANTY WITH RESPECT TO THE USE AND/OR SALE OF ST PRODUCTS INCLUDING WITHOUT LIMITATION IMPLIED WARRANTIES OF MERCHANTABILITY, FITNESS FOR A PARTICULAR PURPOSE (AND THEIR EQUIVALENTS UNDER THE LAWS OF ANY JURISDICTION), OR INFRINGEMENT OF ANY PATENT, COPYRIGHT OR OTHER INTELLECTUAL PROPERTY RIGHT.

UNLESS EXPRESSLY APPROVED IN WRITING BY TWO AUTHORIZED ST REPRESENTATIVES, ST PRODUCTS ARE NOT RECOMMENDED, AUTHORIZED OR WARRANTED FOR USE IN MILITARY, AIR CRAFT, SPACE, LIFE SAVING, OR LIFE SUSTAINING APPLICATIONS, NOR IN PRODUCTS OR SYSTEMS WHERE FAILURE OR MALFUNCTION MAY RESULT IN PERSONAL INJURY, DEATH, OR SEVERE PROPERTY OR ENVIRONMENTAL DAMAGE. ST PRODUCTS WHICH ARE NOT SPECIFIED AS "AUTOMOTIVE GRADE" MAY ONLY BE USED IN AUTOMOTIVE APPLICATIONS AT USER’S OWN RISK.

Resale of ST products with provisions different from the statements and/or technical features set forth in this document shall immediately void any warranty granted by ST for the ST product or service described herein and shall not create or extend in any manner whatsoever, any liability of ST.

ST and the ST logo are trademarks or registered trademarks of ST in various countries.

Information in this document supersedes and replaces all information previously supplied.

The ST logo is a registered trademark of STMicroelectronics. All other names are the property of their respective owners.

© 2012 STMicroelectronics - All rights reserved

STMicroelectronics group of companies

Australia - Belgium - Brazil - Canada - China - Czech Republic - Finland - France - Germany - Hong Kong - India - Israel - Italy - Japan - Malaysia - Malta - Morocco - Philippines - Singapore - Spain - Sweden - Switzerland - United Kingdom - United States of America

www.st.com

Downloaded from Elcodis.com electronic components distributor