International
IOR Rectifier

IRGP4069DPbF
IRGP4069D-EPbF

INSULATED GATE BIPOLAR TRANSISTOR WITH ULTRAFAST SOFT RECOVERY DIODE

Features

- Low $V_{CE\ (ON)}$ Trench IGBT Technology
- Low Switching Losses
- Maximum Junction Temperature 175 °C
- 5 µS short circuit SOA
- Square RBSOA
- 100% of The Parts Tested for I_{LM}
- Positive $V_{CE\ (ON)}$ Temperature Coefficient
- Tight Parameter Distribution
- Lead Free Package

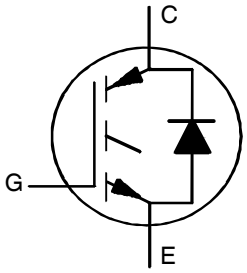

n-channel

V_{CES} = 600V

$I_{C(Nominal)}$ = 35A

$t_{SC} \geq 5\mu s$, $T_{J(max)}$ = 175°C

$V_{CE(on)}$ typ. = 1.6V

Benefits

- High Efficiency in a Wide Range of Applications
- Suitable for a Wide Range of Switching Frequencies due to Low $V_{CE\ (ON)}$ and Low Switching Losses
- Rugged Transient Performance for Increased Reliability
- Excellent Current Sharing in Parallel Operation

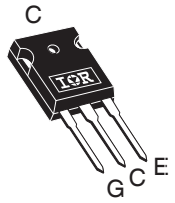

TO-247AC
IRGP4069DPbF

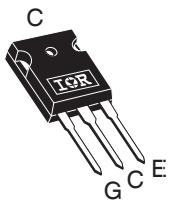

TO-247AD
IRGP4069D-EPbF

G	C	E
Gate	Collector	Emitter

Absolute Maximum Ratings

	Parameter	Max.	Units
V_{CES}	Collector-to-Emitter Voltage	600	V
I_C @ T_C = 25°C	Continuous Collector Current	76	A
I_C @ T_C = 100°C	Continuous Collector Current	50	
$I_{NOMINAL}$	Nominal Current	35	
I_{CM}	Pulse Collector Current, V_{GE} = 15V	105	
I_{LM}	Clamped Inductive Load Current, V_{GE} = 20V ①	140	
I_F @ T_C = 25°C	Diode Continous Forward Current	76	
I_F @ T_C = 100°C	Diode Continous Forward Current	50	
I_{FM}	Diode Maximum Forward Current ②	140	
V_{GE}	Continuous Gate-to-Emitter Voltage	±20	V
	Transient Gate-to-Emitter Voltage	±30	
P_D @ T_C = 25°C	Maximum Power Dissipation	268	W
P_D @ T_C = 100°C	Maximum Power Dissipation	134	
T_J	Operating Junction and	-55 to +175	°C
T_{STG}	Storage Temperature Range		
	Soldering Temperature, for 10 sec.	300 (0.063 in. (1.6mm) from case)	
	Mounting Torque, 6-32 or M3 Screw	10 lbf·in (1.1 N·m)	

Thermal Resistance

	Parameter	Min.	Typ.	Max.	Units
$R_{\theta JC}$ (IGBT)	Thermal Resistance Junction-to-Case-(each IGBT) ④	—	—	0.56	°C/W
$R_{\theta JC}$ (Diode)	Thermal Resistance Junction-to-Case-(each Diode) ④	—	—	1.0	
$R_{\theta CS}$	Thermal Resistance, Case-to-Sink (flat, greased surface)	—	0.24	—	
$R_{\theta JA}$	Thermal Resistance, Junction-to-Ambient (typical socket mount)	—	—	40	

Electrical Characteristics @ T_J = 25°C (unless otherwise specified)

	Parameter	Min.	Typ.	Max.	Units	Conditions
$V_{(BR)CES}$	Collector-to-Emitter Breakdown Voltage	600	—	—	V	V_{GE} = 0V, I_C = 100µA ③
$\Delta V_{(BR)CES}/\Delta T_J$	Temperature Coeff. of Breakdown Voltage	—	1.3	—	mV/°C	V_{GE} = 0V, I_C = 1mA (25°C-175°C)
$V_{CE(on)}$	Collector-to-Emitter Saturation Voltage	—	1.6	1.85	V	I_C = 35A, V_{GE} = 15V, T_J = 25°C ②
		—	1.9	—		I_C = 35A, V_{GE} = 15V, T_J = 150°C ②
		—	2.0	—		I_C = 35A, V_{GE} = 15V, T_J = 175°C ②
$V_{GE(th)}$	Gate Threshold Voltage	4.0	—	6.5	V	V_{CE} = V_{GE}, I_C = 1.0mA
$\Delta V_{GE(th)}/\Delta TJ$	Threshold Voltage temp. coefficient	—	-18	—	mV/°C	V_{CE} = V_{GE}, I_C = 1.0mA (25°C - 175°C)
gfe	Forward Transconductance	—	25	—	S	V_{CE} = 50V, I_C = 35A, PW = 60µs
I_{CES}	Collector-to-Emitter Leakage Current	—	1.0	70	µA	V_{GE} = 0V, V_{CE} = 600V
		—	770	—		V_{GE} = 0V, V_{CE} = 600V, T_J = 175°C
V_{FM}	Diode Forward Voltage Drop	—	2.2	3.8	V	I_F = 35A
		—	1.4	—		I_F = 35A, T_J = 175°C
I_{GES}	Gate-to-Emitter Leakage Current	—	—	±100	nA	V_{GE} = ±20V

Switching Characteristics @ T_J = 25°C (unless otherwise specified)

	Parameter	Min.	Typ.	Max.	Units	Conditions
Q_g	Total Gate Charge (turn-on)	—	69	104	nC	I_C = 35A
Q_{ge}	Gate-to-Emitter Charge (turn-on)	—	18	27		V_{GE} = 15V
Q_{gc}	Gate-to-Collector Charge (turn-on)	—	29	44		V_{CC} = 400V
E_{on}	Turn-On Switching Loss	—	390	508	µJ	I_C = 35A, V_{CC} = 400V, V_{GE} = 15V
E_{off}	Turn-Off Switching Loss	—	632	753		R_G = 10Ω, L = 200µH, L_S = 150nH, T_J = 25°C
E_{total}	Total Switching Loss	—	1022	1261		Energy losses include tail & diode reverse recovery
$t_{d(on)}$	Turn-On delay time	—	46	56	ns	I_C = 35A, V_{CC} = 400V, V_{GE} = 15V
t_r	Rise time	—	33	42		R_G = 10Ω, L = 200µH, L_S = 150nH, T_J = 25°C
$t_{d(off)}$	Turn-Off delay time	—	105	117		
t_f	Fall time	—	44	54		
E_{on}	Turn-On Switching Loss	—	1013	—	µJ	I_C = 35A, V_{CC} = 400V, V_{GE}=15V
E_{off}	Turn-Off Switching Loss	—	929	—		R_G=10Ω, L=200µH, L_S=150nH, T_J = 175°C
E_{total}	Total Switching Loss	—	1942	—		Energy losses include tail & diode reverse recovery
$t_{d(on)}$	Turn-On delay time	—	43	—	ns	I_C = 35A, V_{CC} = 400V, V_{GE} = 15V
t_r	Rise time	—	35	—		R_G = 10Ω, L = 200µH, L_S = 150nH
$t_{d(off)}$	Turn-Off delay time	—	127	—		T_J = 175°C
t_f	Fall time	—	61	—		
C_{ies}	Input Capacitance	—	2113	—	pF	V_{GE} = 0V
C_{oes}	Output Capacitance	—	197	—		V_{CC} = 30V
C_{res}	Reverse Transfer Capacitance	—	65	—		f = 1.0Mhz
RBSOA	Reverse Bias Safe Operating Area	FULL SQUARE				T_J = 175°C, I_C = 140A V_{CC} = 480V, Vp =600V Rg = 10Ω, V_{GE} = +20V to 0V
SCSOA	Short Circuit Safe Operating Area	5	—	—	µs	V_{CC} = 400V, Vp =600V Rg = 10Ω, V_{GE} = +15V to 0V
Erec	Reverse Recovery Energy of the Diode	—	304	—	µJ	T_J = 175°C
t_{rr}	Diode Reverse Recovery Time	—	120	—	ns	V_{CC} = 400V, I_F = 35A
I_{rr}	Peak Reverse Recovery Current	—	25	—	A	V_{GE} = 15V, Rg = 10Ω, L =210µH, L_s = 150nH

Notes:

① V_{CC} = 80% (V_{CES}), V_{GE} = 20V, L = 19µH, R_G = 10Ω.

② Pulse width limited by max. junction temperature.

③ Refer to AN-1086 for guidelines for measuring $V_{(BR)CES}$ safely.

④ R_θ is measured at T_J of approximately 90°C.

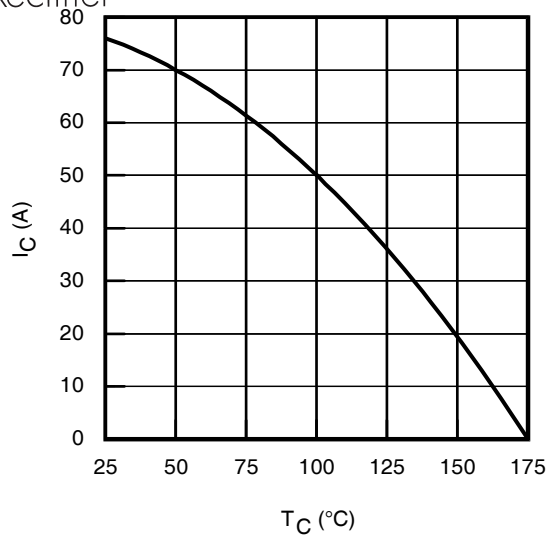

Fig. 1 - Maximum DC Collector Current vs. Case Temperature

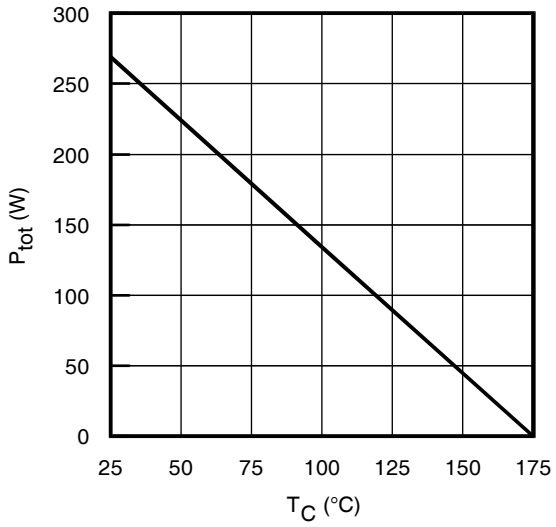

Fig. 2 - Power Dissipation vs. Case Temperature

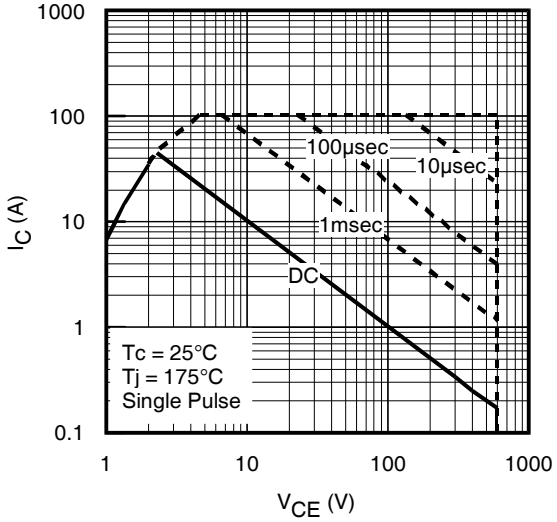

Fig. 3 - Forward SOA
T_C = 25°C, $T_J \leq$ 175°C; V_{GE} =15V

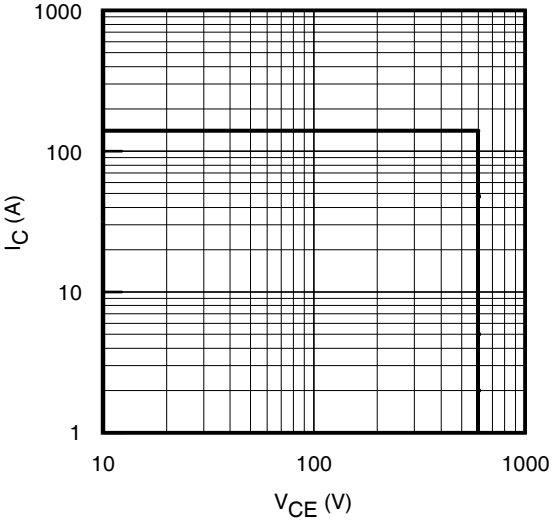

Fig. 4 - Reverse Bias SOA
T_J = 175°C; V_{GE} =20V

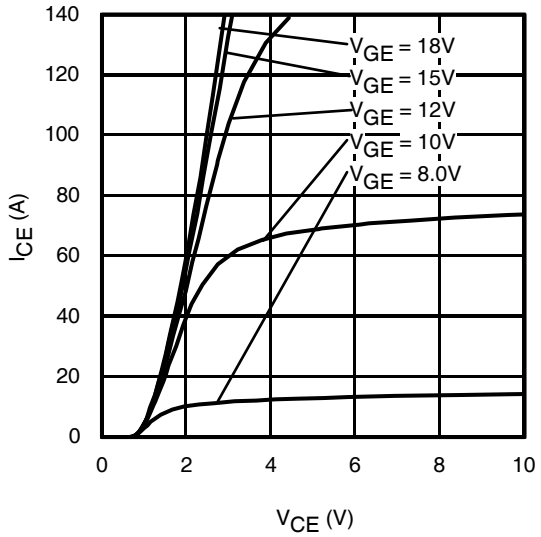

Fig. 5 - Typ. IGBT Output Characteristics
T_J = -40°C; tp = ≤60µs

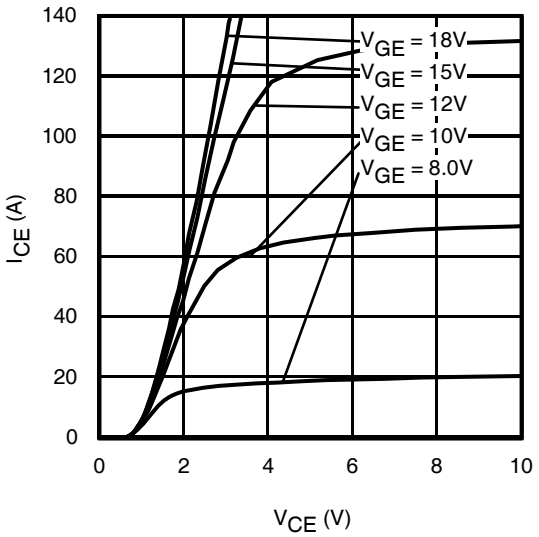

Fig. 6 - Typ. IGBT Output Characteristics
T_J = 25°C; tp = ≤60µs

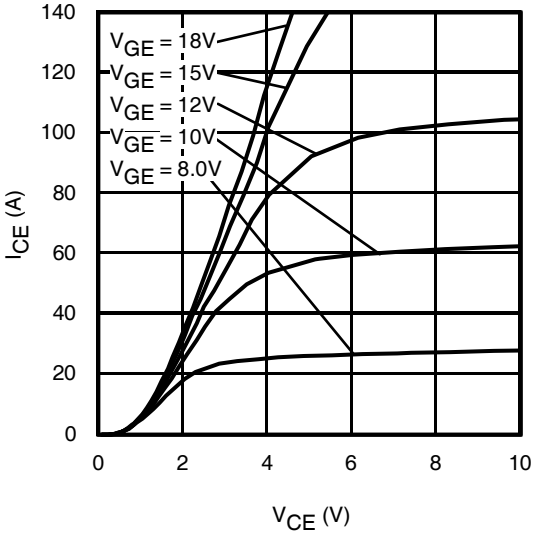

Fig. 7 - Typ. IGBT Output Characteristics
T_J = 175°C; tp = ≤60µs

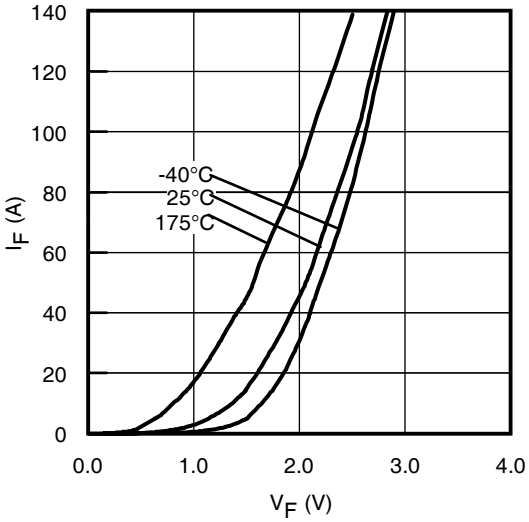

Fig. 8 - Typ. Diode Forward Characteristics
tp = 80µs

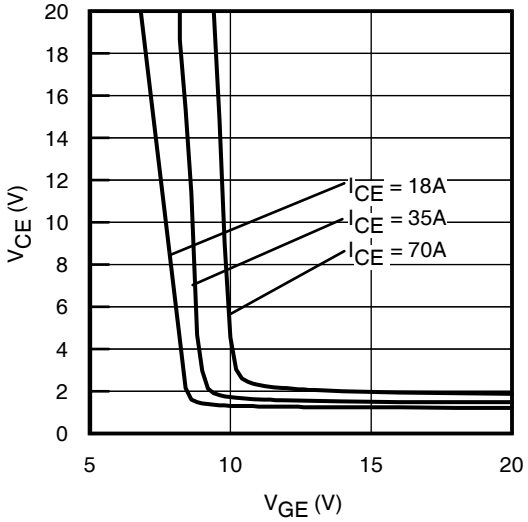

Fig. 9 - Typical V_{CE} vs. V_{GE}
T_J = -40°C

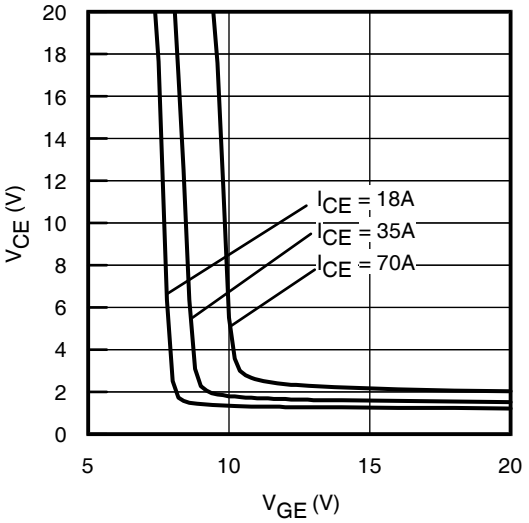

Fig. 10 - Typical V_{CE} vs. V_{GE}
T_J = 25°C

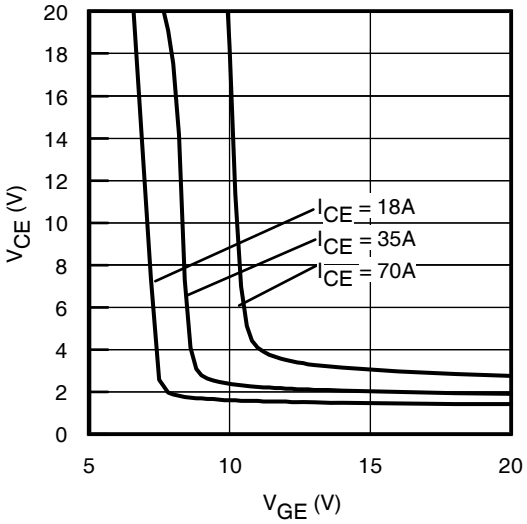

Fig. 11 - Typical V_{CE} vs. V_{GE}
T_J = 175°C

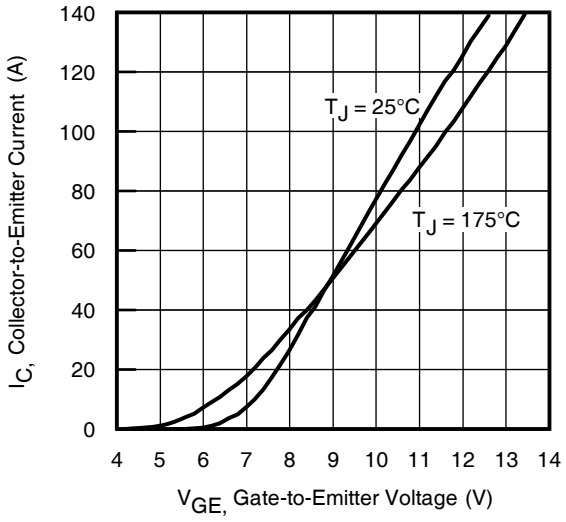

Fig. 12 - Typ. Transfer Characteristics
V_{CE} = 50V; tp = 60µs

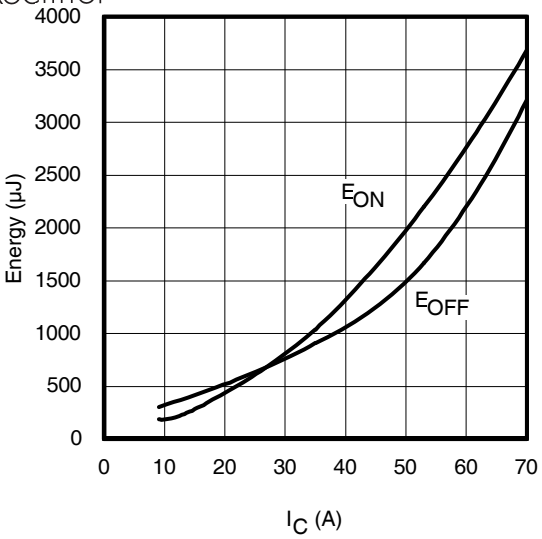

Fig. 13 - Typ. Energy Loss vs. I_C
T_J = 175°C; L = 200µH; V_{CE} = 400V, R_G = 10Ω; V_{GE} = 15V

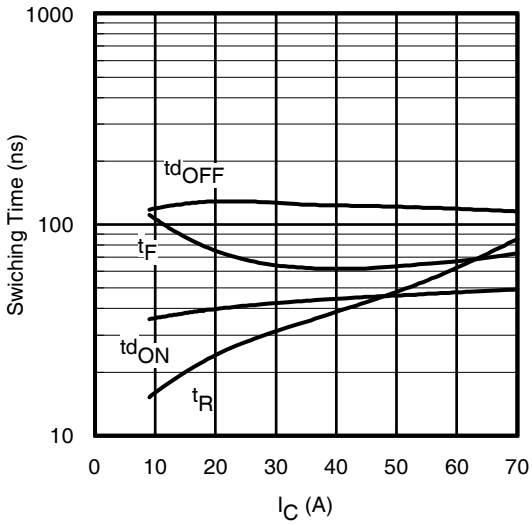

Fig. 14 - Typ. Switching Time vs. I_C
T_J = 175°C; L = 200µH; V_{CE} = 400V, R_G = 10Ω; V_{GE} = 15V

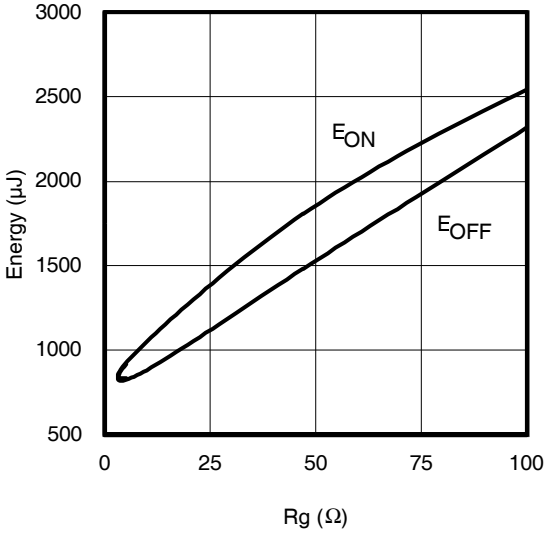

Fig. 15 - Typ. Energy Loss vs. R_G
T_J = 175°C; L = 210µH; V_{CE} = 400V, I_{CE} = 35A; V_{GE} = 15V

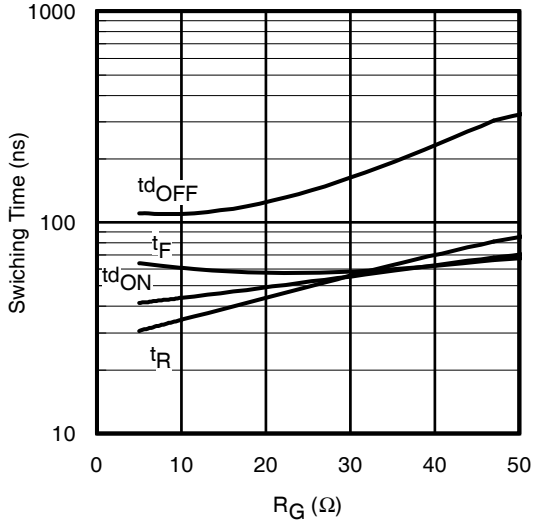

Fig. 16 - Typ. Switching Time vs. R_G
T_J = 175°C; L = 210µH; V_{CE} = 400V, I_{CE} = 35A; V_{GE} = 15V

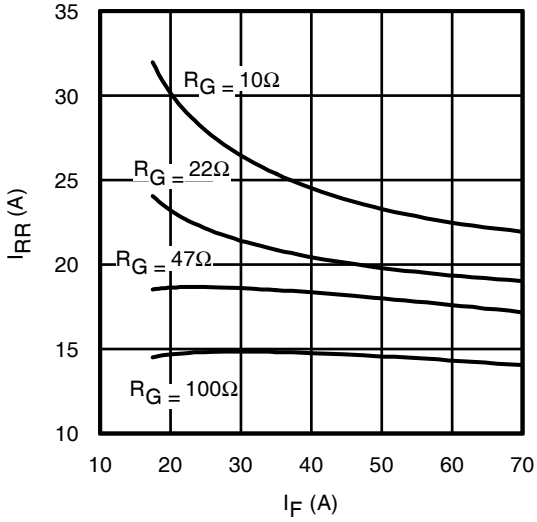

Fig. 17 - Typ. Diode I_{RR} vs. I_F
T_J = 175°C

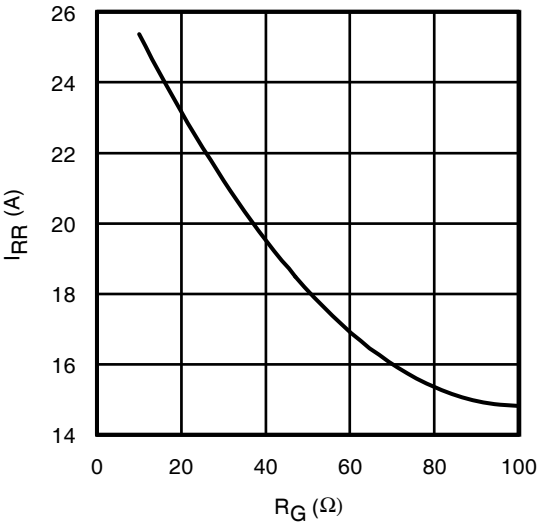

Fig. 18 - Typ. Diode I_{RR} vs. R_G
T_J = 175°C

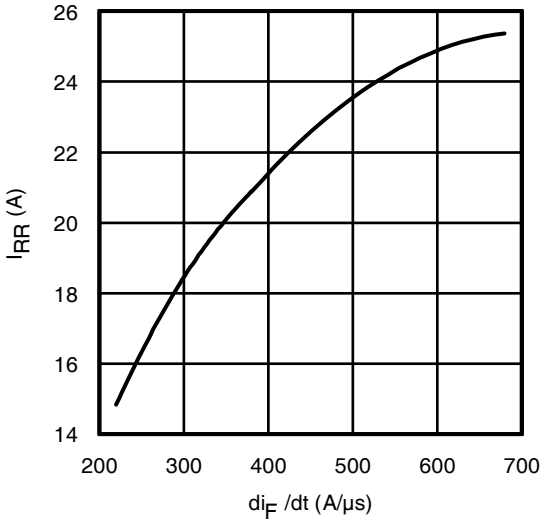

Fig. 19 - Typ. Diode I_{RR} vs. di_F/dt
V_{CC} = 400V; V_{GE} = 15V; I_F = 35A; T_J = 175°C

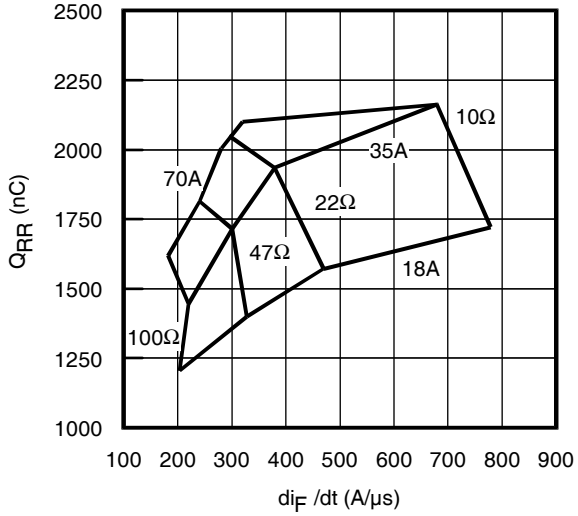

Fig. 20 - Typ. Diode Q_{RR} vs. di_F/dt
V_{CC} = 400V; V_{GE} = 15V; T_J = 175°C

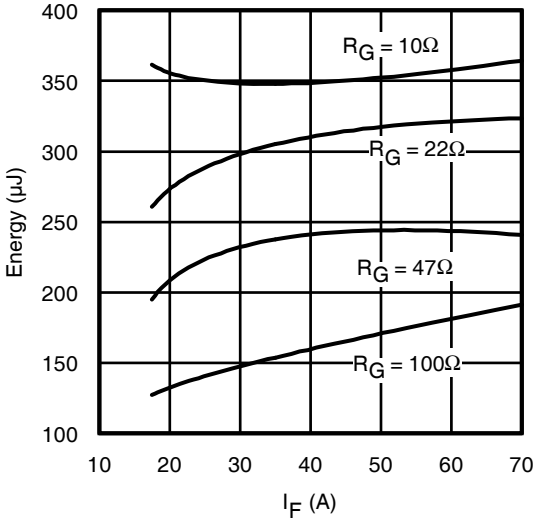

Fig. 21 - Typ. Diode E_{RR} vs. I_F
T_J = 175°C

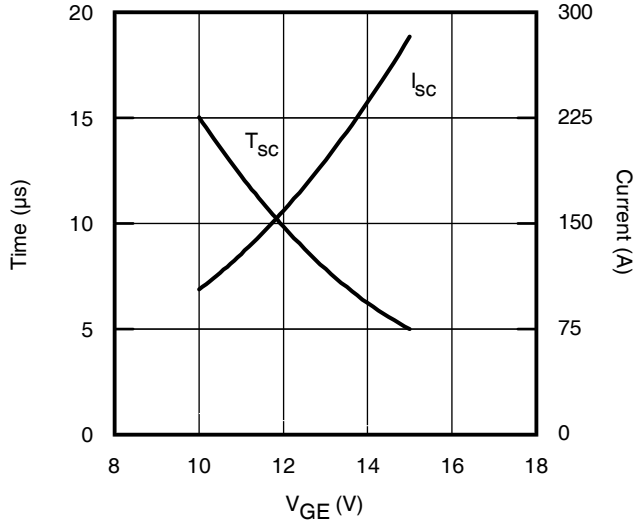

Fig. 22 - V_{GE} vs. Short Circuit Time
V_{CC} = 400V; T_C = 25°C

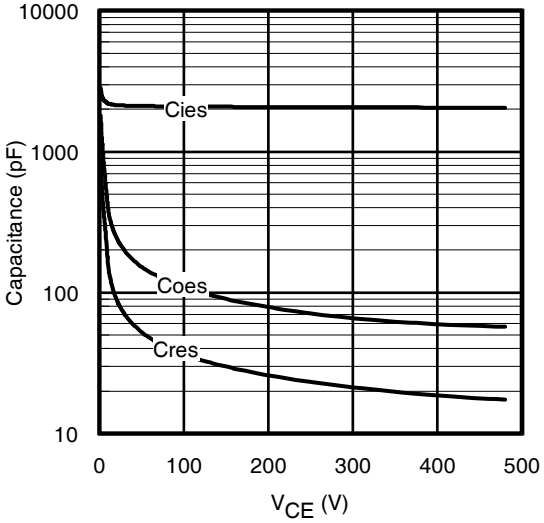

Fig. 23 - Typ. Capacitance vs. V_{CE}
V_{GE}= 0V; f = 1MHz

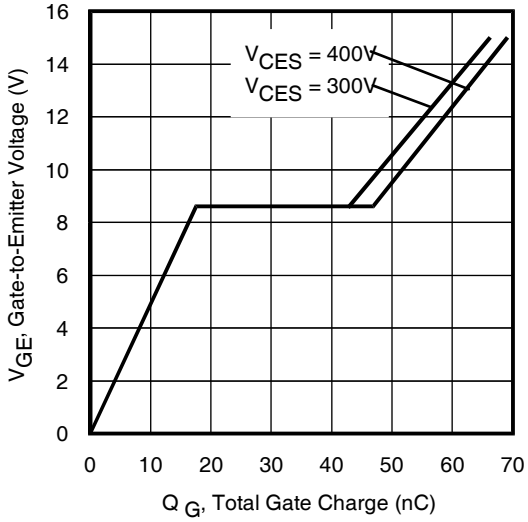

Fig. 24 - Typical Gate Charge vs. V_{GE}
I_{CE} = 35A; L = 740µH

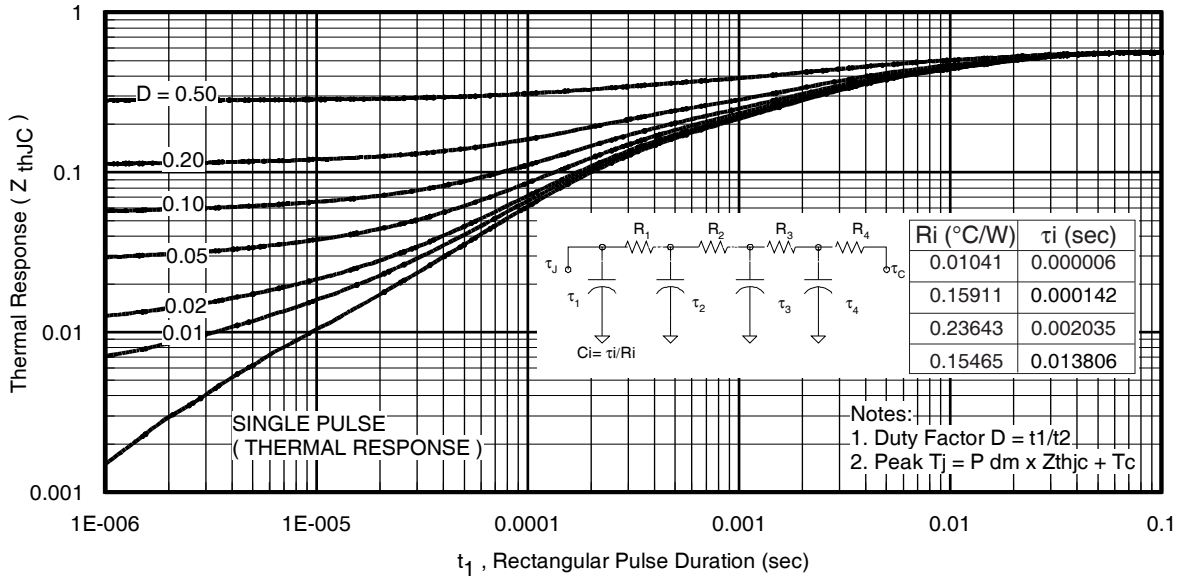

Fig 25. Maximum Transient Thermal Impedance, Junction-to-Case (IGBT)

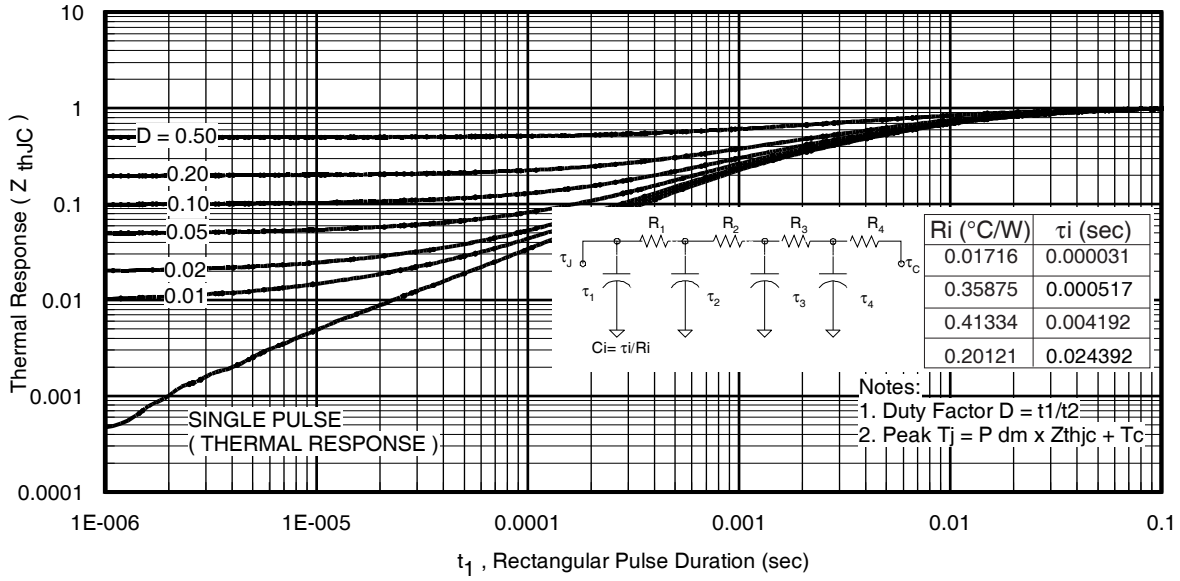

Fig. 26. Maximum Transient Thermal Impedance, Junction-to-Case (DIODE)

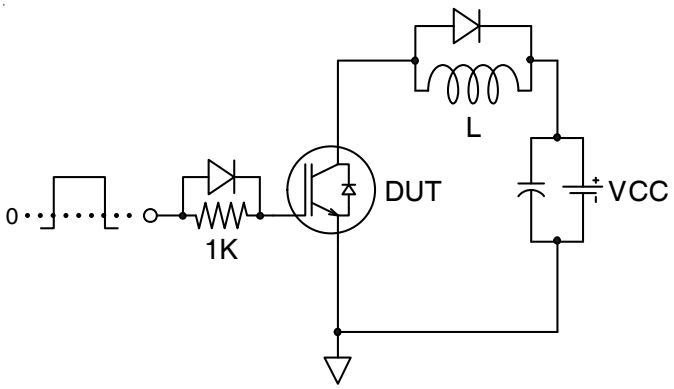

Fig.C.T.1 - Gate Charge Circuit (turn-off)

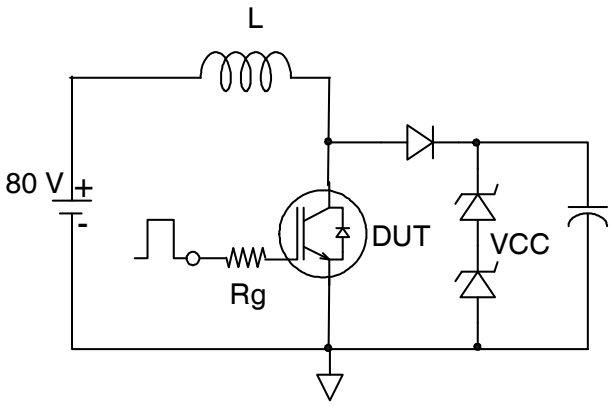

Fig.C.T.2 - RBSOA Circuit

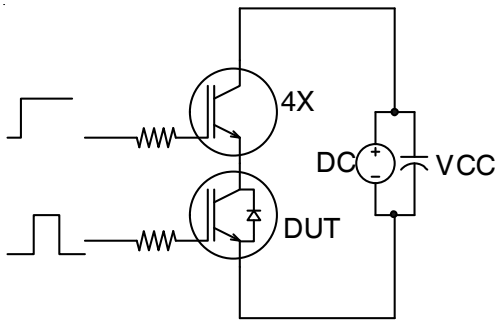

SCSOA

Fig.C.T.3 - S.C. SOA Circuit

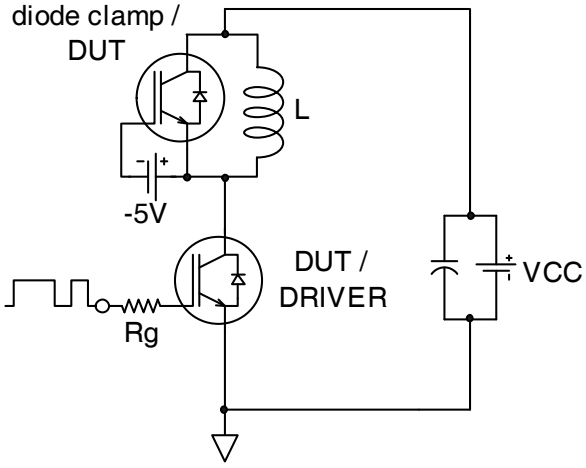

Fig.C.T.4 - Switching Loss Circuit

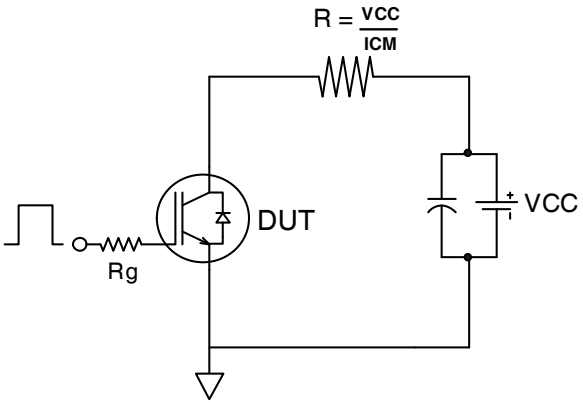

Fig.C.T.5 - Resistive Load Circuit

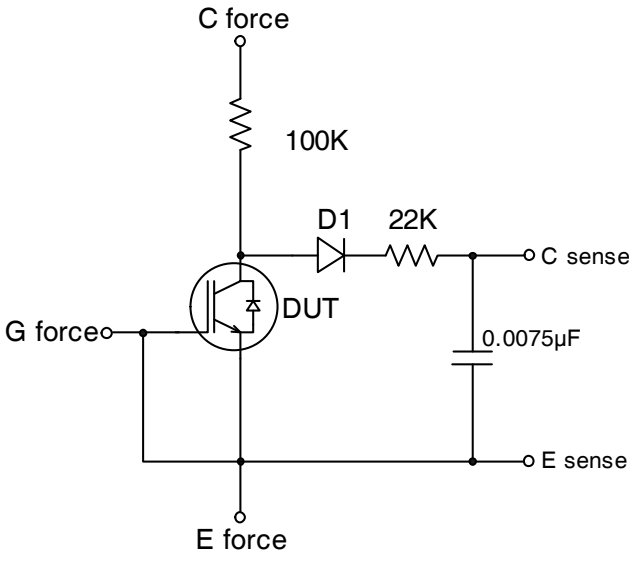

Fig.C.T.6 - BVCES Filter Circuit

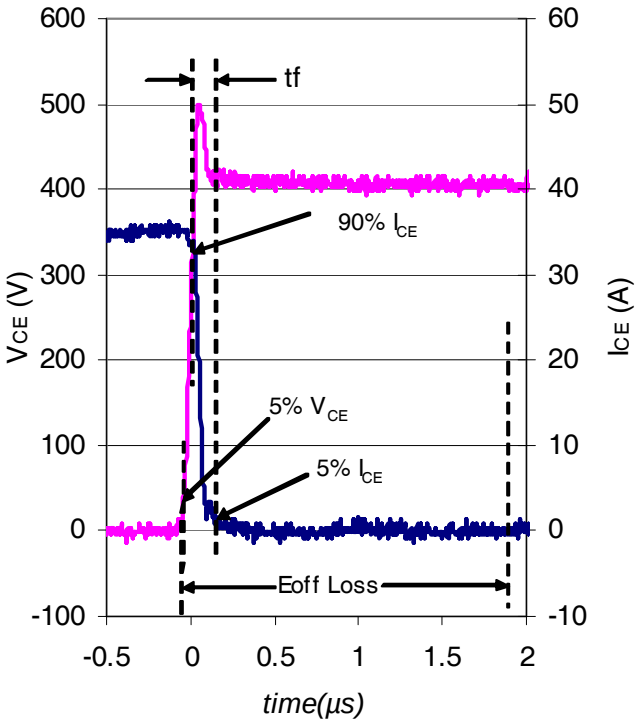

Fig. WF1 - Typ. Turn-off Loss Waveform
@ T_J = 175°C using Fig. CT.4

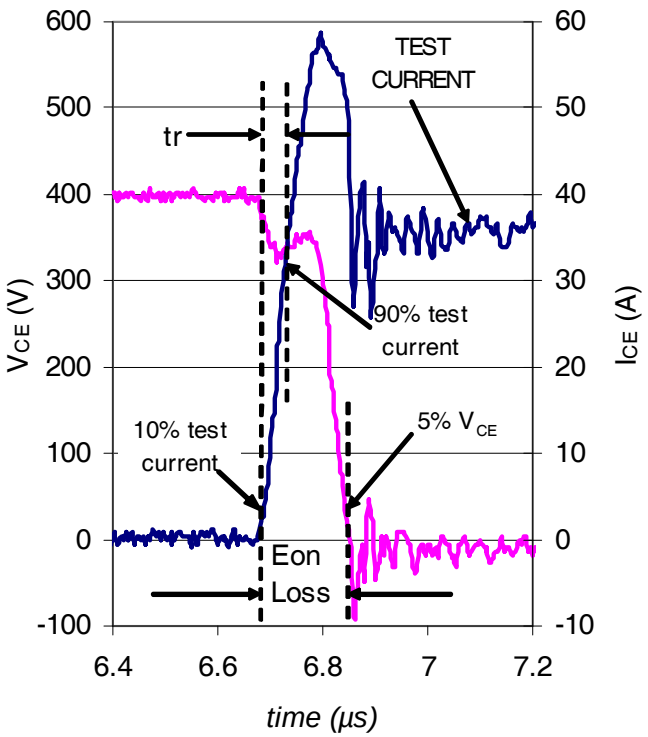

Fig. WF2 - Typ. Turn-on Loss Waveform
@ T_J = 175°C using Fig. CT.4

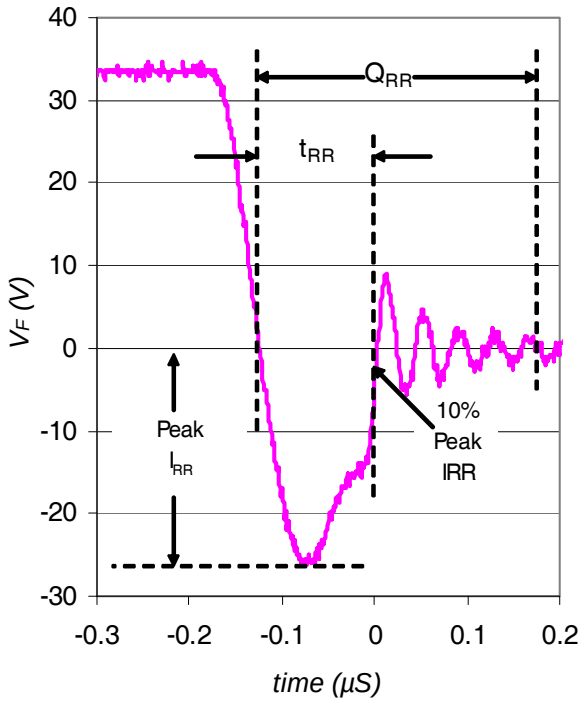

Fig. WF3 - Typ. Diode Recovery Waveform
@ T_J = 175°C using Fig. CT.4

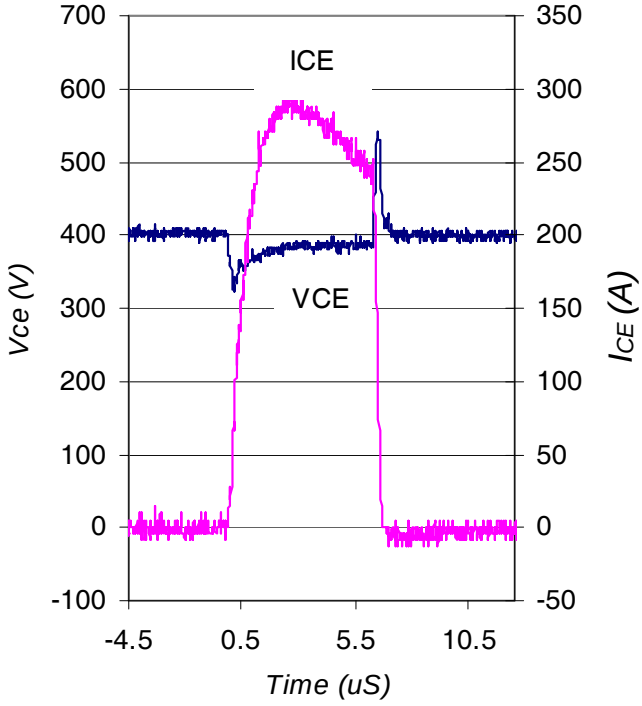

Fig. WF4 - Typ. S.C. Waveform
@ T_J = 25°C using Fig. CT.3

TO-247AC Package Outline

Dimensions are shown in millimeters (inches)

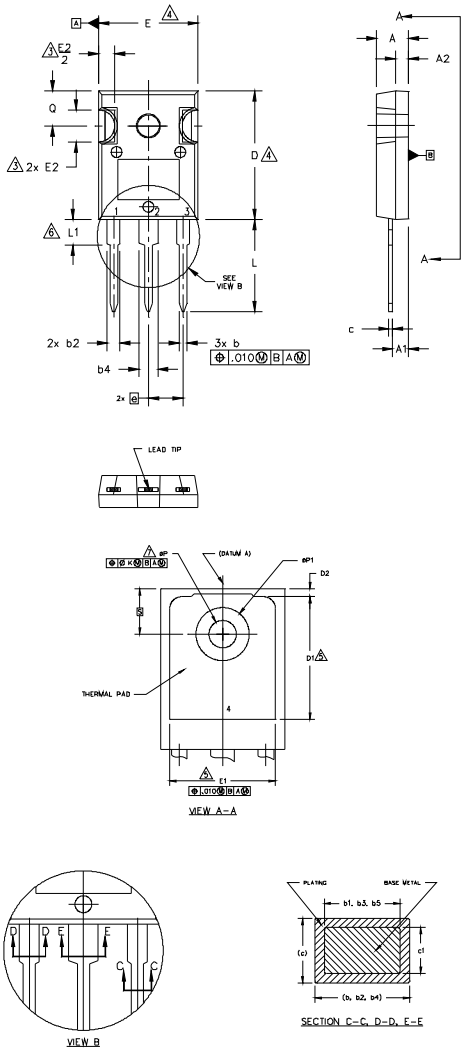

NOTES:

1. DIMENSIONING AND TOLERANCING AS PER ASME Y14.5M 1994.
2. DIMENSIONS ARE SHOWN IN INCHES.
3. CONTOUR OF SLOT OPTIONAL.
4. DIMENSION D & E DO NOT INCLUDE MOLD FLASH. MOLD FLASH SHALL NOT EXCEED .005" (0.127) PER SIDE. THESE DIMENSIONS ARE MEASURED AT THE OUTERMOST EXTREMES OF THE PLASTIC BODY.
5. THERMAL PAD CONTOUR OPTIONAL WITHIN DIMENSIONS D1 & E1.
6. LEAD FINISH UNCONTROLLED IN L1.
7. øP TO HAVE A MAXIMUM DRAFT ANGLE OF 1.5 ° TO THE TOP OF THE PART WITH A MAXIMUM HOLE DIAMETER OF .154 INCH.
8. OUTLINE CONFORMS TO JEDEC OUTLINE TO-247AC .

SYMBOL	DIMENSIONS				NOTES
	INCHES		MILLIMETERS		
	MIN.	MAX.	MIN.	MAX.	
A	.183	.209	4.65	5.31	
A1	.087	.102	2.21	2.59	
A2	.059	.098	1.50	2.49	
b	.039	.055	0.99	1.40	
b1	.039	.053	0.99	1.35	
b2	.065	.094	1.65	2.39	
b3	.065	.092	1.65	2.34	
b4	.102	.135	2.59	3.43	
b5	.102	.133	2.59	3.38	
c	.015	.035	0.38	0.89	
c1	.015	.033	0.38	0.84	
D	.776	.815	19.71	20.70	4
D1	.515	–	13.08	–	5
D2	.020	.053	0.51	1.35	
E	.602	.625	15.29	15.87	4
E1	.530	–	13.46	–	
E2	.178	.216	4.52	5.49	
e	.215 BSC		5.46 BSC		
øk	.010		0.25		
L	.559	.634	14.20	16.10	
L1	.146	.169	3.71	4.29	
øP	.140	.144	3.56	3.66	
øP1	–	.291	–	7.39	
Q	.209	.224	5.31	5.69	
S	.217 BSC		5.51 BSC		

LEAD ASSIGNMENTS

HEXFET

1.– GATE
2.– DRAIN
3.– SOURCE
4.– DRAIN

IGBTs, CoPACK

1.– GATE
2.– COLLECTOR
3.– EMITTER
4.– COLLECTOR

DIODES

1.– ANODE/OPEN
2.– CATHODE
3.– ANODE

TO-247AC Part Marking Information

EXAMPLE: THIS IS AN IRFPE30
WITH ASSEMBLY
LOT CODE 5657
ASSEMBLED ON WW 35, 2001
IN THE ASSEMBLY LINE "H"

Note: "P" in assembly line position
indicates "Lead-Free"

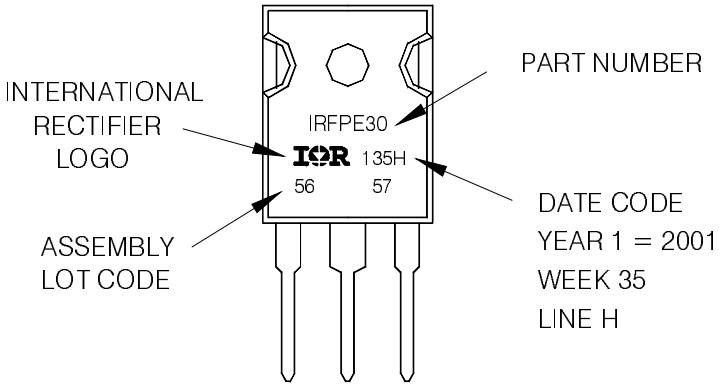

TO-247AC package is not recommended for Surface Mount Application.

Note: For the most current drawing please refer to IR website at http://www.irf.com/package/

TO-247AD Package Outline

Dimensions are shown in millimeters (inches)

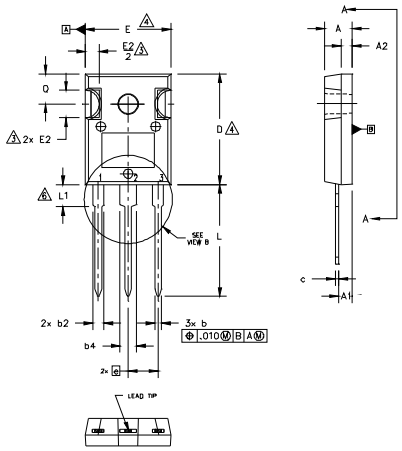

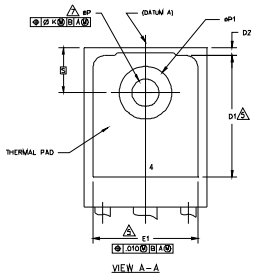

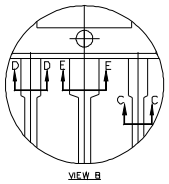

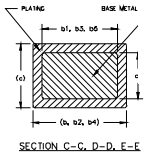

NOTES:

1. DIMENSIONING AND TOLERANCING AS PER ASME Y14.5M 1994.
2. DIMENSIONS ARE SHOWN IN INCHES.
3. CONTOUR OF SLOT OPTIONAL.
4. DIMENSION D & E DO NOT INCLUDE MOLD FLASH. MOLD FLASH SHALL NOT EXCEED .005" (0.127) PER SIDE. THESE DIMENSIONS ARE MEASURED AT THE OUTERMOST EXTREMES OF THE PLASTIC BODY.
5. THERMAL PAD CONTOUR OPTIONAL WITHIN DIMENSIONS D1 & E1.
6. LEAD FINISH UNCONTROLLED IN L1.
7. øP TO HAVE A MAXIMUM DRAFT ANGLE OF 1.5 ° TO THE TOP OF THE PART WITH A MAXIMUM HOLE DIAMETER OF .154 INCH.
8. OUTLINE CONFORMS TO JEDEC OUTLINE TO-247AD.

SYMBOL	DIMENSIONS				NOTES
	INCHES		MILLIMETERS		
	MIN.	MAX.	MIN.	MAX.	
A	.183	.209	4.65	5.31	
A1	.087	.102	2.21	2.59	
A2	.059	.098	1.50	2.49	
b	.039	.055	0.99	1.40	
b1	.039	.053	0.99	1.35	
b2	.065	.094	1.65	2.39	
b3	.065	.092	1.65	2.34	
b4	.102	.135	2.59	3.43	
b5	.102	.133	2.59	3.38	
c	.015	.035	0.38	0.89	
c1	.015	.033	0.38	0.84	
D	.776	.815	19.71	20.70	4
D1	.515	–	13.08	–	5
D2	.020	.053	0.51	1.35	
E	.602	.625	15.29	15.87	4
E1	.530	–	13.46	–	
E2	.178	.216	4.52	5.49	
e	.215 BSC		5.46 BSC		
øk	.010		0.25		
L	.780	.827	19.57	21.00	
L1	.146	.169	3.71	4.29	
øP	.140	.144	3.56	3.66	
øP1	–	.291	–	7.39	
Q	.209	.224	5.31	5.69	
S	.217 BSC		5.51 BSC		

LEAD ASSIGNMENTS

HEXFET

1.– GATE
2.– DRAIN
3.– SOURCE
4.– DRAIN

IGBTs, CoPACK

1.– GATE
2.– COLLECTOR
3.– EMITTER
4.– COLLECTOR

DIODES

1.– ANODE/OPEN
2.– CATHODE
3.– ANODE

TO-247AD Part Marking Information

EXAMPLE: THIS IS AN IRGP30B120KD-E
WITH ASSEMBLY
LOT CODE 5657
ASSEMBLED ON WW 35, 2000
IN THE ASSEMBLY LINE "H"

Note: "P" in assembly line position
indicates "Lead-Free"

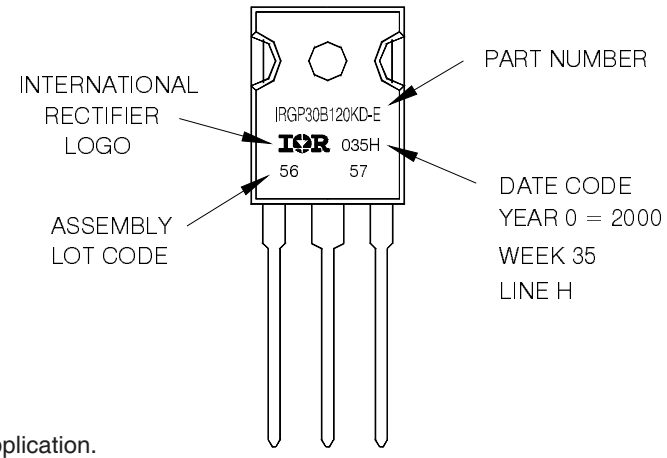

TO-247AD package is not recommended for Surface Mount Application.

Note: For the most current drawing please refer to IR website at http://www.irf.com/package/

Data and specifications subject to change without notice.
This product has been designed and qualified for Industrial market.
Qualification Standards can be found on IR's Web site.

International
IOR Rectifier

IR WORLD HEADQUARTERS: 233 Kansas St., El Segundo, California 90245, USA Tel: (310) 252-7105
TAC Fax: (310) 252-7903
Visit us at www.irf.com for sales contact information. 10/09