International
IOR Rectifier

IRGP4068DPbF
IRGP4068D-EPbF

INSULATED GATE BIPOLAR TRANSISTOR WITH ULTRA-LOW VF DIODE FOR INDUCTION HEATING AND SOFT SWITCHING APPLICATIONS

Features

- Low $V_{CE\ (ON)}$ Trench IGBT Technology
- Low Switching Losses
- Maximum Junction temperature 175 °C
- 5 µS short circuit SOA
- Square RBSOA
- 100% of the parts tested for I_{LM} ①
- Positive $V_{CE\ (ON)}$ Temperature co-efficient
- Ultra-low V_F Hyperfast Diode
- Tight parameter distribution
- Lead Free Package

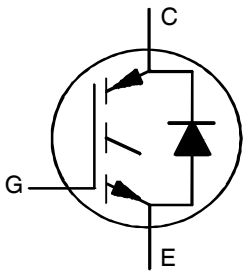

n-channel

V_{CES} = 600V

I_C = 48A, T_C = 100°C

$t_{SC} \geq$ 5µs, $T_{J(max)}$ = 175°C

$V_{CE(on)}$ typ. = 1.65V

Benefits

- Device optimized for induction heating and soft switching applications
- High Efficiency due to Low $V_{CE(on)}$, Low Switching Losses and Ultra-low V_F
- Rugged transient Performance for increased reliability
- Excellent Current sharing in parallel operation
- Low EMI

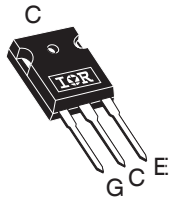

TO-247AC
IRGP4068DPbF

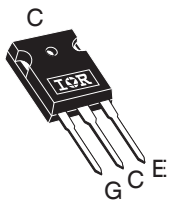

TO-247AD
IRGP4068D-EPbF

G	C	E
Gate	Collector	Emitter

Absolute Maximum Ratings

	Parameter	Max.	Units
V_{CES}	Collector-to-Emitter Voltage	600	V
I_C @ T_C = 25°C	Continuous Collector Current	96	A
I_C @ T_C = 100°C	Continuous Collector Current	48	
I_{CM}	Pulse Collector Current, V_{GE} = 15V	144	
I_{LM}	Clamped Inductive Load Current, V_{GE} = 20V ①	192	
I_F @ T_C = 160°C	Diode Continous Forward Current ⑤	8.0	
I_{FSM}	Diode Non Repetitive Peak Surge Current @ T_J = 25°C ②⑤	175	
I_{FRM} @Tc = 100°C	Diode Repetitive Peak Forward Current at tp=10µs ②④	100	
V_{GE}	Continuous Gate-to-Emitter Voltage	±20	V
	Transient Gate-to-Emitter Voltage	±30	
P_D @ T_C = 25°C	Maximum Power Dissipation	330	W
P_D @ T_C = 100°C	Maximum Power Dissipation	170	
T_J	Operating Junction and	-55 to +175	°C
T_{STG}	Storage Temperature Range		
	Soldering Temperature, for 10 sec.	300 (0.063 in. (1.6mm) from case)	
	Mounting Torque, 6-32 or M3 Screw	10 lbf·in (1.1 N·m)	

Thermal Resistance

	Parameter	Min.	Typ.	Max.	Units
$R_{\theta JC}$ (IGBT)	Thermal Resistance Junction-to-Case-(each IGBT)	—	—	0.45	°C/W
$R_{\theta JC}$ (Diode)	Thermal Resistance Junction-to-Case-(each Diode)	—	—	2.0	
$R_{\theta CS}$	Thermal Resistance, Case-to-Sink (flat, greased surface)	—	0.24	—	
$R_{\theta JA}$	Thermal Resistance, Junction-to-Ambient (typical socket mount)	—	—	40	

Electrical Characteristics @ T_J = 25°C (unless otherwise specified)

	Parameter	Min.	Typ.	Max.	Units	Conditions	Ref.Fig
$V_{(BR)CES}$	Collector-to-Emitter Breakdown Voltage	600	—	—	V	V_{GE} = 0V, I_C = 100µA ③	CT6
$\Delta V_{(BR)CES}/\Delta T_J$	Temperature Coeff. of Breakdown Voltage	—	0.30	—	V/°C	V_{GE} = 0V, I_C = 1mA (25°C-175°C)	CT6
$V_{CE(on)}$	Collector-to-Emitter Saturation Voltage	—	1.65	2.14	V	I_C = 48A, V_{GE} = 15V, T_J = 25°C	4,5,6
		—	2.0	—		I_C = 48A, V_{GE} = 15V, T_J = 150°C	8,9,10
		—	2.05	—		I_C = 48A, V_{GE} = 15V, T_J = 175°C	
$V_{GE(th)}$	Gate Threshold Voltage	4.0	—	6.5	V	V_{CE} = V_{GE}, I_C = 1.4mA	8,9,10,11,20
gfe	Forward Transconductance	—	32	—	S	V_{CE} = 50V, I_C = 48A, PW = 80µs	
I_{CES}	Collector-to-Emitter Leakage Current	—	1.0	150	µA	V_{GE} = 0V, V_{CE} = 600V	
		—	450	1000		V_{GE} = 0V, V_{CE} = 600V, T_J = 175°C	
V_{FM}	Diode Forward Voltage Drop	—	0.96	1.05	V	I_F = 8.0A	7
		—	0.81	0.86		I_F = 8.0A, T_J = 150°C	
I_{GES}	Gate-to-Emitter Leakage Current	—	—	±100	nA	V_{GE} = ±20V	

Switching Characteristics @ T_J = 25°C (unless otherwise specified)

	Parameter	Min.	Typ.	Max.	Units	Conditions	Ref.Fig
Q_g	Total Gate Charge (turn-on)	—	95	140	nC	I_C = 48A	18
Q_{ge}	Gate-to-Emitter Charge (turn-on)	—	28	42		V_{GE} = 15V	CT1
Q_{gc}	Gate-to-Collector Charge (turn-on)	—	35	53		V_{CC} = 400V	
E_{off}	Turn-Off Switching Loss	—	1275	1481	µJ	I_C = 48A, V_{CC} = 400V, V_{GE} = 15V R_G = 10Ω, L = 200µH,T_J = 25°C Energy losses include tail	CT4
$t_{d(off)}$	Turn-Off delay time	—	145	176	ns	I_C = 48A, V_{CC} = 400V, V_{GE} = 15V	
t_f	Fall time	—	35	46		R_G = 10Ω, L = 200µH,T_J = 25°C	
E_{off}	Turn-Off Switching Loss	—	1585	—	µJ	I_C = 48A, V_{CC} = 400V, V_{GE} = 15V R_G = 10Ω, L = 200µH,T_J = 175°C Energy losses include tail	CT4
$t_{d(off)}$	Turn-Off delay time	—	165	—	ns	I_C = 48A, V_{CC} = 400V, V_{GE} = 15V	WF1
t_f	Fall time	—	45	—		R_G=10Ω, L=200µH, T_J = 175°C	
C_{ies}	Input Capacitance	—	3025	—	pF	V_{GE} = 0V	17
C_{oes}	Output Capacitance	—	245	—		V_{CC} = 30V	
C_{res}	Reverse Transfer Capacitance	—	90	—		f = 1.0Mhz	
RBSOA	Reverse Bias Safe Operating Area	FULL SQUARE				T_J = 175°C, I_C = 192A V_{CC} = 480V, Vp =600V Rg = 10Ω, V_{GE} = +20V to 0V	3 CT2
SCSOA	Short Circuit Safe Operating Area	5	—	—	µs	V_{CC} = 400V, Vp =600V Rg = 10Ω, V_{GE} = +15V to 0V	16, CT3 WF2

Notes:

① V_{CC} = 80% (V_{CES}), V_{GE} = 20V, L = 200µH, R_G = 10Ω.

② Pulse width limited by max. junction temperature.

③ Refer to AN-1086 for guidelines for measuring $V_{(BR)CES}$ safely.

④ fsw = 20KHz, refer to figure 19.

⑤ Sinusoidal half wave, t=10ms.

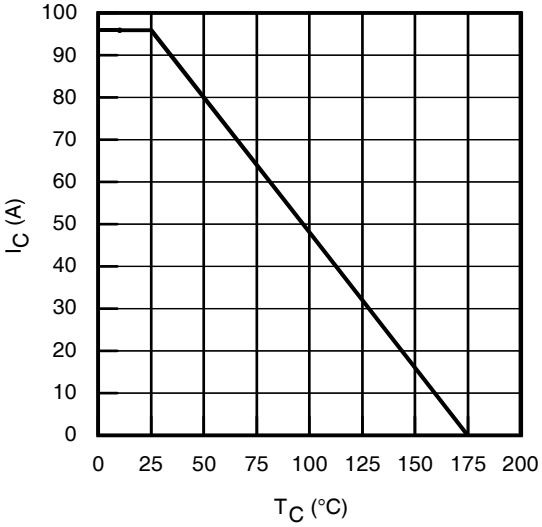

Fig. 1 - Maximum DC Collector Current vs. Case Temperature

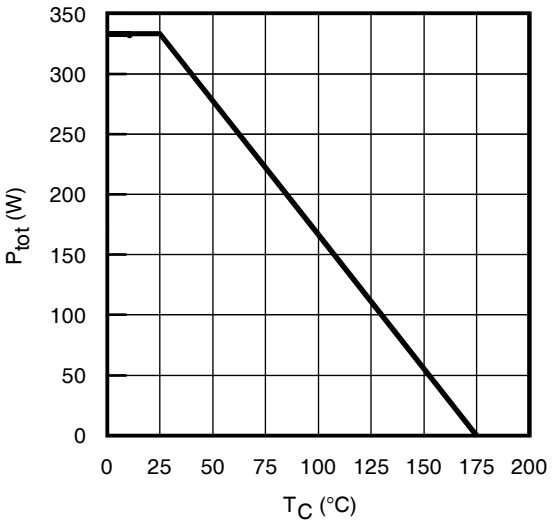

Fig. 2 - Power Dissipation vs. Case Temperature

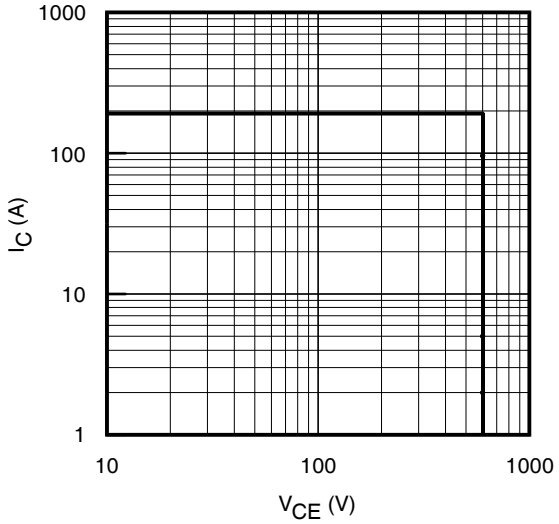

Fig. 3 - Reverse Bias SOA
T_J = 175°C; V_{GE} = 20V

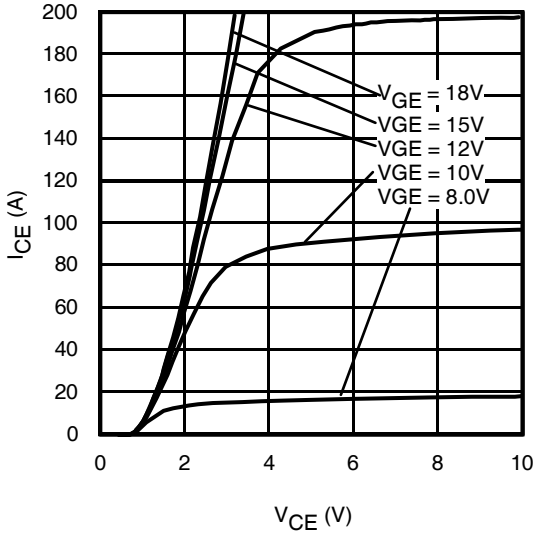

Fig. 4 - Typ. IGBT Output Characteristics
T_J = -40°C; tp = 80µs

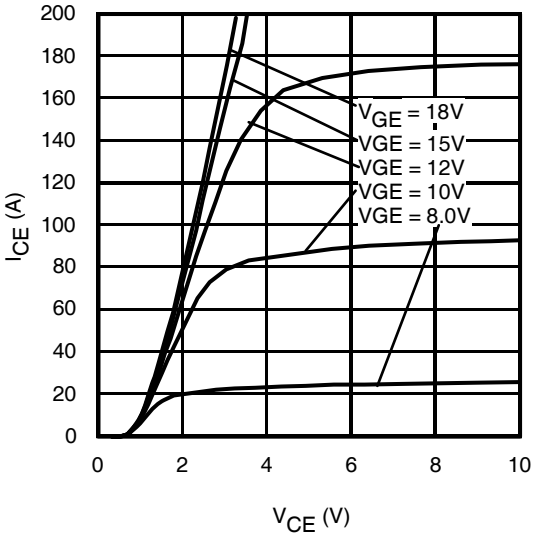

Fig. 5 - Typ. IGBT Output Characteristics
T_J = 25°C; tp = 80µs

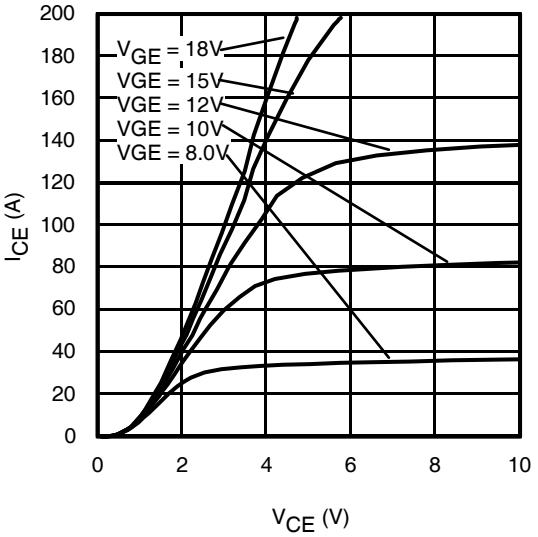

Fig. 6 - Typ. IGBT Output Characteristics
T_J = 175°C; tp = 80µs

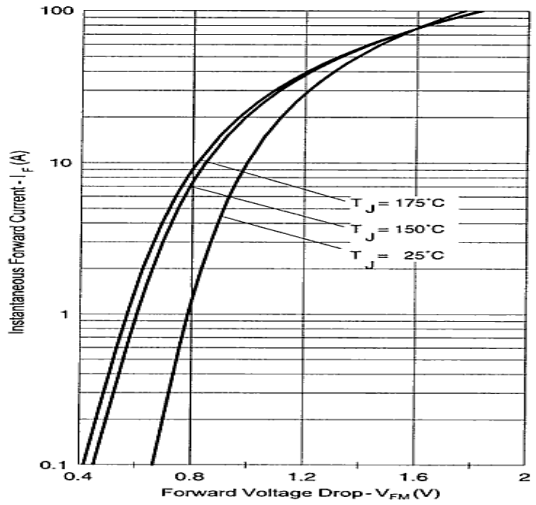

Fig. 7 - Typ. Diode Forward Voltage Drop Characteristics

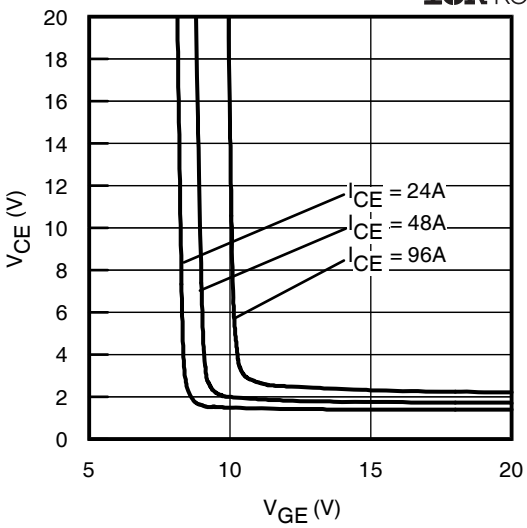

Fig. 8 - Typical V_{CE} vs. V_{GE}
T_J = -40°C

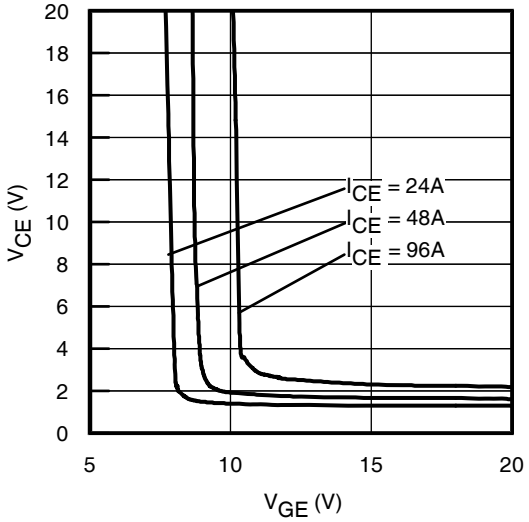

Fig. 9 - Typical V_{CE} vs. V_{GE}
T_J = 25°C

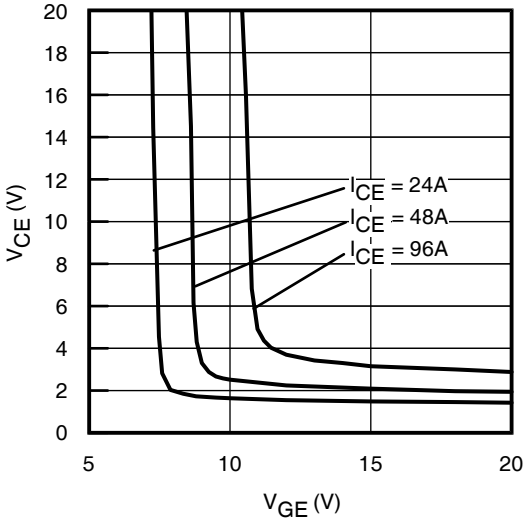

Fig. 10 - Typical V_{CE} vs. V_{GE}
T_J = 175°C

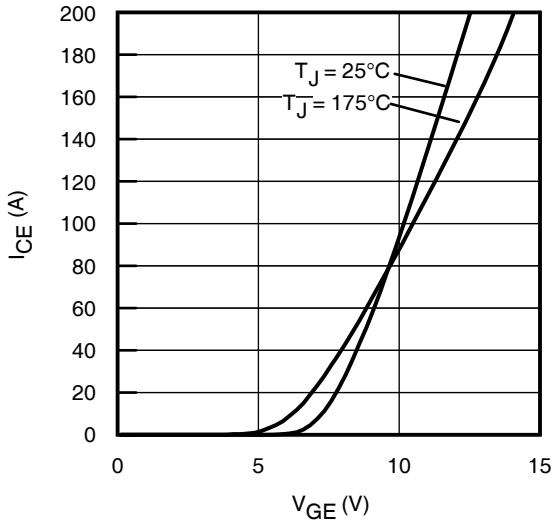

Fig. 11 - Typ. Transfer Characteristics
V_{CE} = 50V; tp = 10µs

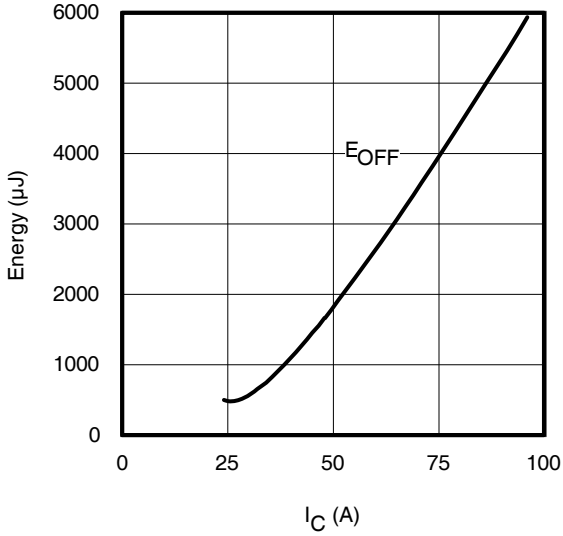

Fig. 12 - Typ. Energy Loss vs. I_C
T_J = 175°C; L = 200µH; V_{CE} = 400V, R_G = 10Ω; V_{GE} = 15V

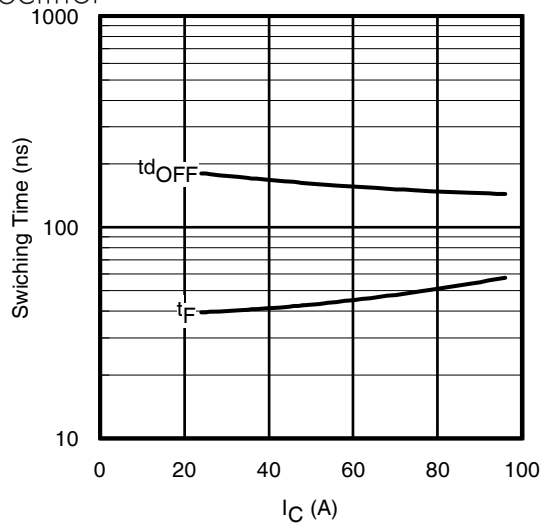

Fig. 13 - Typ. Switching Time vs. I_C
T_J = 175°C; L = 200µH; V_{CE} = 400V, R_G = 10Ω; V_{GE} = 15V

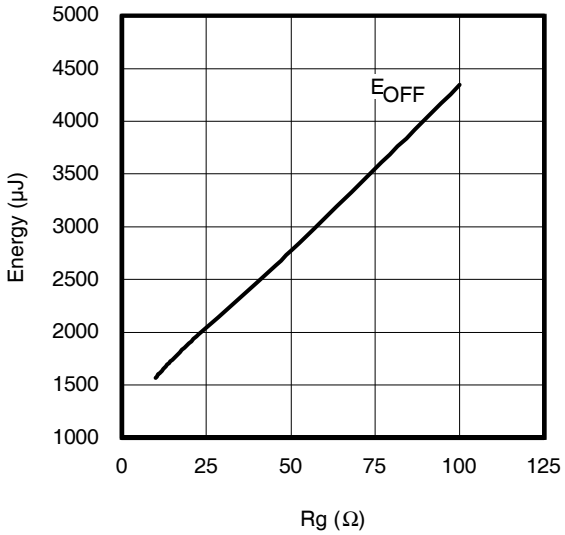

Fig. 14 - Typ. Energy Loss vs. R_G
T_J = 175°C; L = 200µH; V_{CE} = 400V, I_{CE} = 48A; V_{GE} = 15V

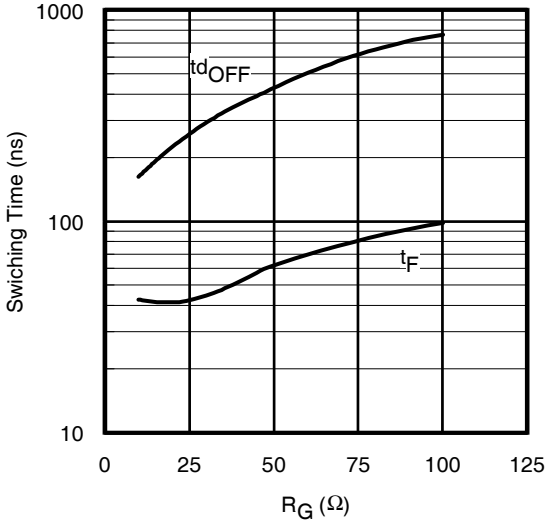

Fig. 15 - Typ. Switching Time vs. R_G
T_J = 175°C; L = 200µH; V_{CE} = 400V, I_{CE} = 48A; V_{GE} = 15V

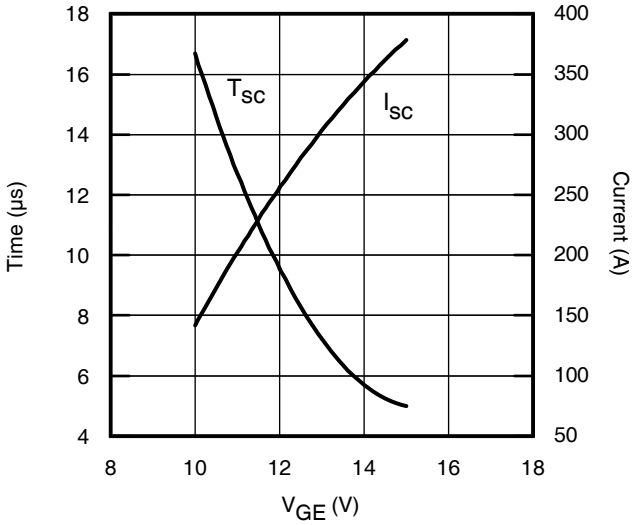

Fig. 16 - V_{GE} vs. Short Circuit
V_{CC} = 400V; T_C = 25°C

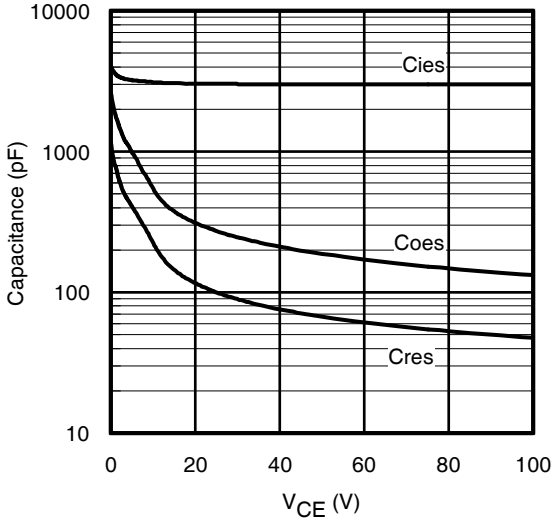

Fig. 17 - Typ. Capacitance vs. V_{CE}
V_{GE}= 0V; f = 1MHz

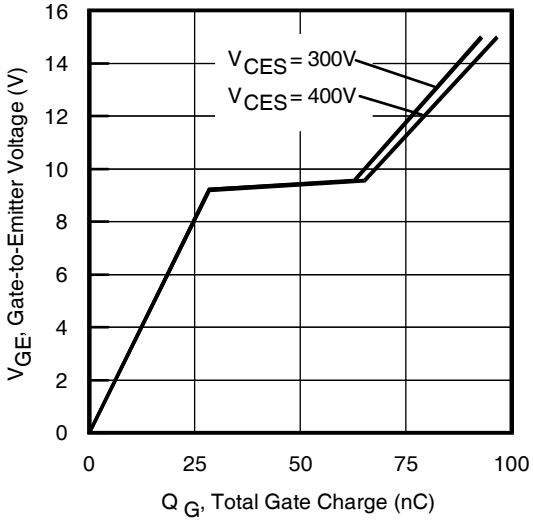

Fig. 18 - Typical Gate Charge vs. V_{GE}
I_{CE} = 48A; L = 600µH

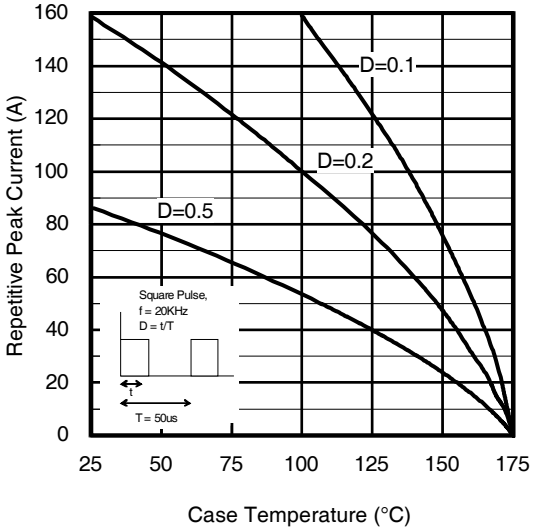

Fig 19. Maximum Diode Repetitive Forward Peak Current vs. Case Temperature

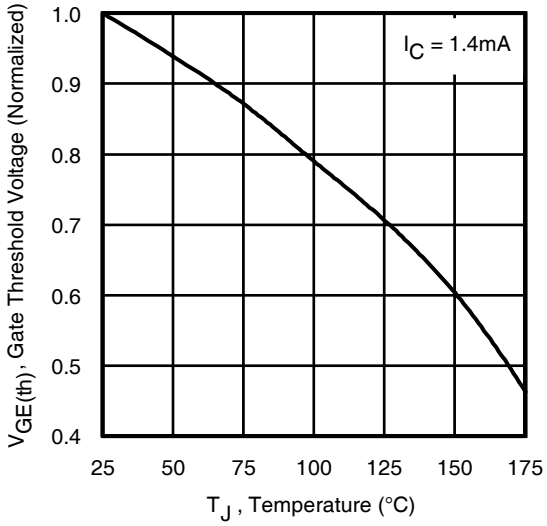

Fig 20. Typical Gate Threshold Voltage (Normalized) vs. Junction Temperature

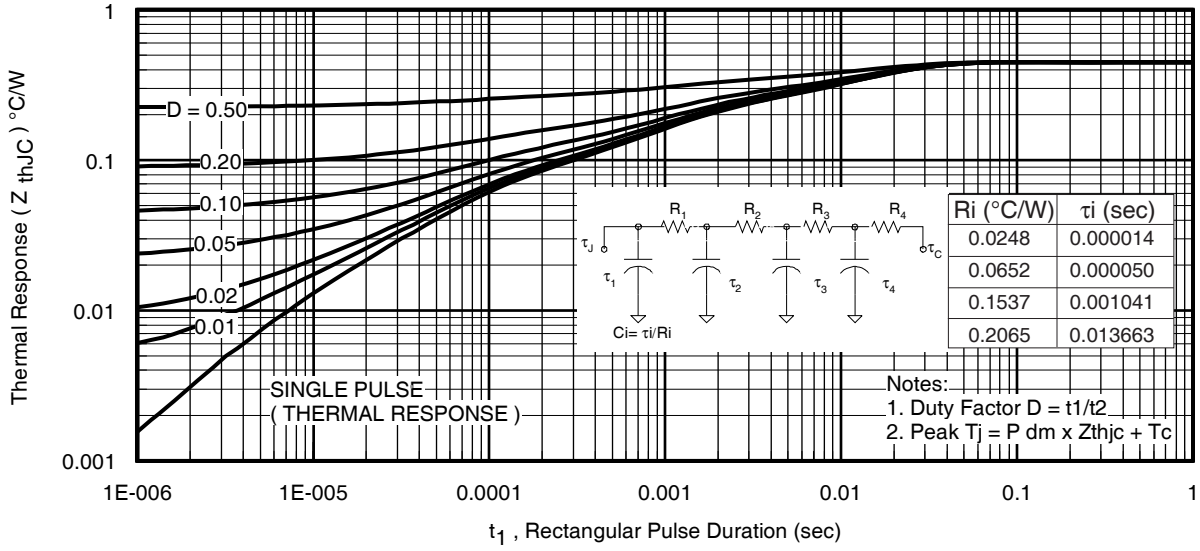

Fig 21. Maximum Transient Thermal Impedance, Junction-to-Case (IGBT)

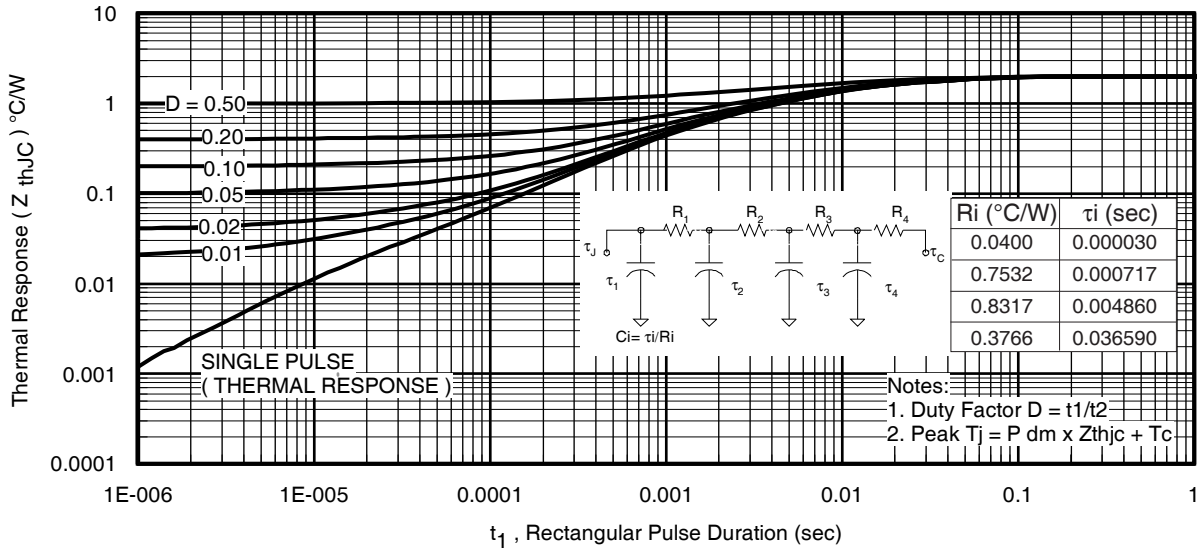

Fig. 22. Maximum Transient Thermal Impedance, Junction-to-Case (DIODE)

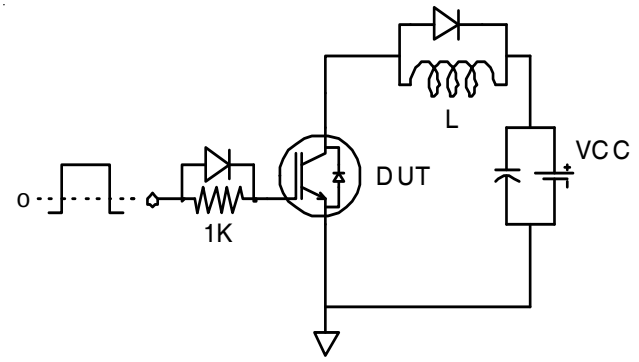

Fig.C.T.1 - Gate Charge Circuit (turn-off)

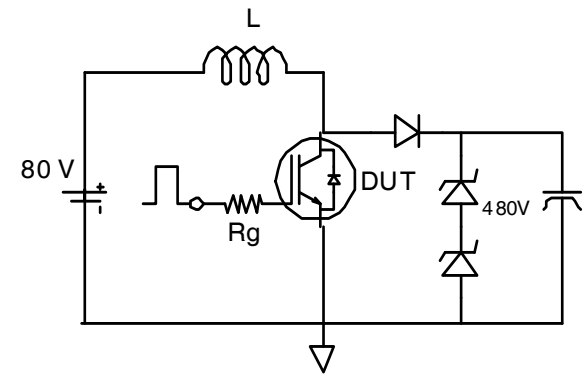

Fig.C.T.2 - RBSOA Circuit

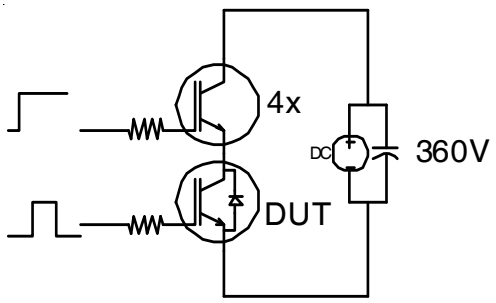

Fig.C.T.3 - S.C. SOA Circuit

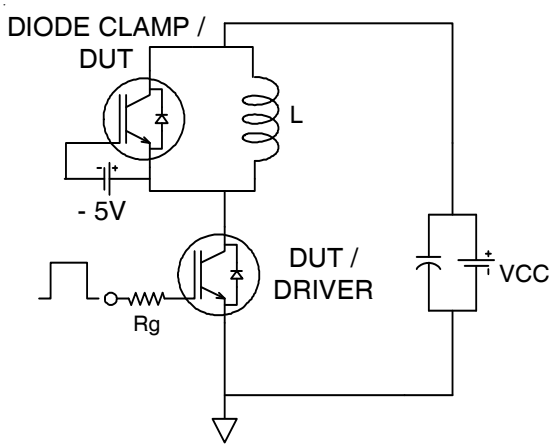

Fig.C.T.4 - Switching Loss Circuit

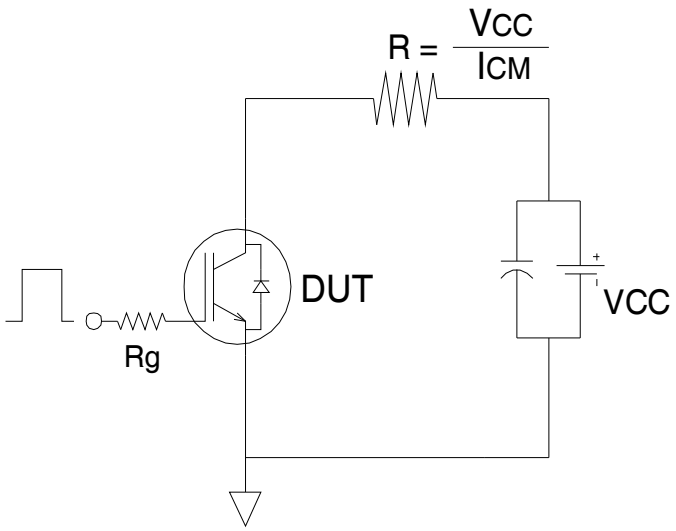

Fig.C.T.5 - Resistive Load Circuit

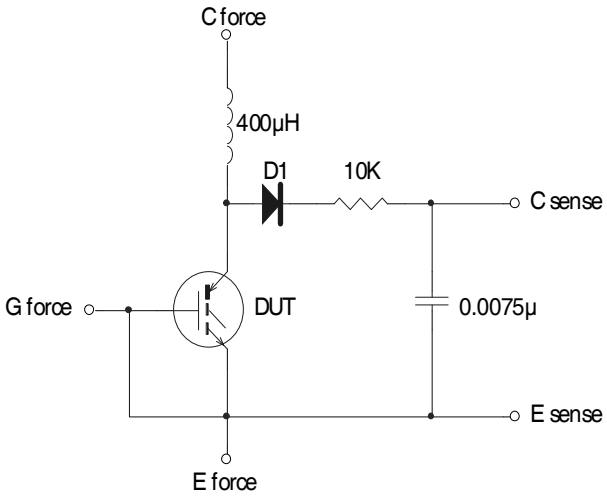

Fig.C.T.6 - BVCES Filter Circuit

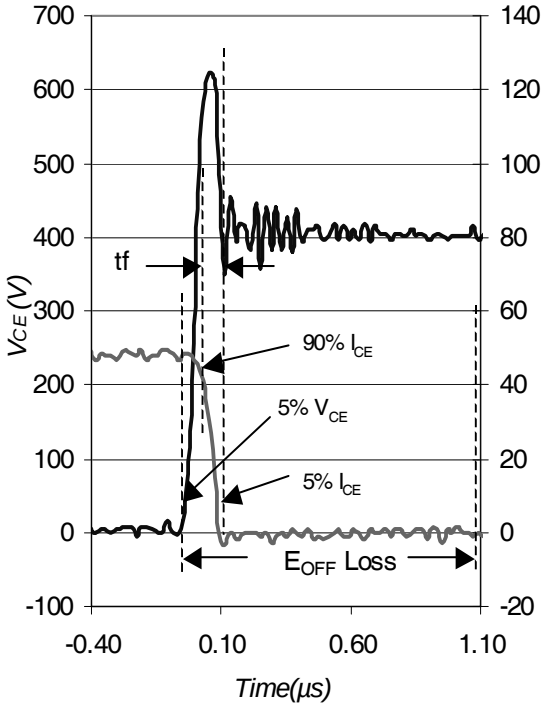

Fig. WF1 - Typ. Turn-off Loss Waveform
@ T_J = 175°C using Fig. CT.4

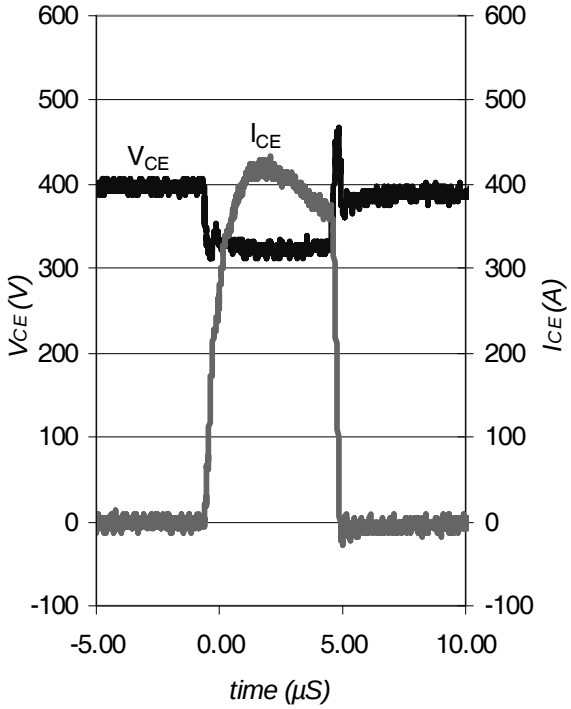

Fig. WF2 - Typ. S.C. Waveform
@ T_J = 25°C using Fig. CT.3

TO-247AC Package Outline

Dimensions are shown in millimeters (inches)

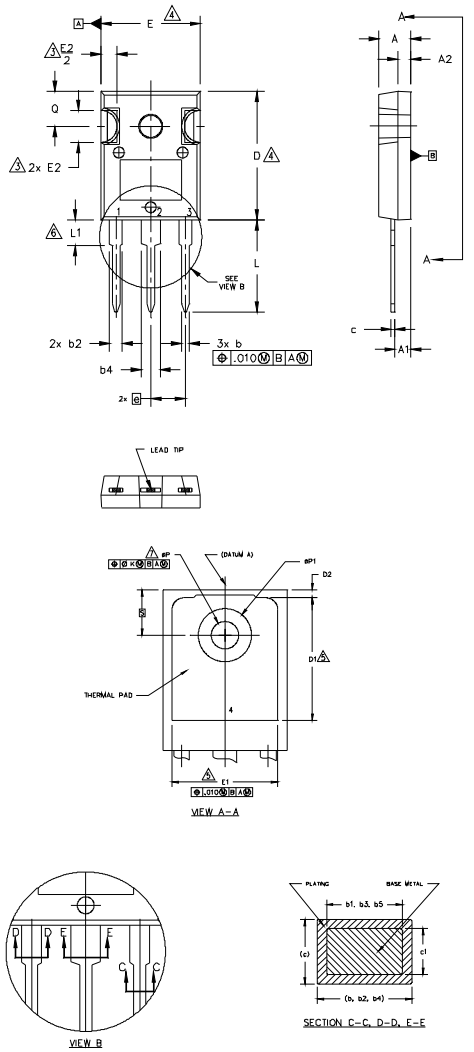

NOTES:

1. DIMENSIONING AND TOLERANCING AS PER ASME Y14.5M 1994.
2. DIMENSIONS ARE SHOWN IN INCHES.
3. CONTOUR OF SLOT OPTIONAL.
4. DIMENSION D & E DO NOT INCLUDE MOLD FLASH. MOLD FLASH SHALL NOT EXCEED .005" (0.127) PER SIDE. THESE DIMENSIONS ARE MEASURED AT THE OUTERMOST EXTREMES OF THE PLASTIC BODY.
5. THERMAL PAD CONTOUR OPTIONAL WITHIN DIMENSIONS D1 & E1.
6. LEAD FINISH UNCONTROLLED IN L1.
7. øP TO HAVE A MAXIMUM DRAFT ANGLE OF 1.5 ° TO THE TOP OF THE PART WITH A MAXIMUM HOLE DIAMETER OF .154 INCH.
8. OUTLINE CONFORMS TO JEDEC OUTLINE TO-247AC .

SYMBOL	DIMENSIONS				NOTES
	INCHES		MILLIMETERS		
	MIN.	MAX.	MIN.	MAX.	
A	.183	.209	4.65	5.31	
A1	.087	.102	2.21	2.59	
A2	.059	.098	1.50	2.49	
b	.039	.055	0.99	1.40	
b1	.039	.053	0.99	1.35	
b2	.065	.094	1.65	2.39	
b3	.065	.092	1.65	2.34	
b4	.102	.135	2.59	3.43	
b5	.102	.133	2.59	3.38	
c	.015	.035	0.38	0.89	
c1	.015	.033	0.38	0.84	
D	.776	.815	19.71	20.70	4
D1	.515	–	13.08	–	5
D2	.020	.053	0.51	1.35	
E	.602	.625	15.29	15.87	4
E1	.530	–	13.46	–	
E2	.178	.216	4.52	5.49	
e	.215 BSC		5.46 BSC		
øk	.010		0.25		
L	.559	.634	14.20	16.10	
L1	.146	.169	3.71	4.29	
øP	.140	.144	3.56	3.66	
øP1	–	.291	–	7.39	
Q	.209	.224	5.31	5.69	
S	.217 BSC		5.51 BSC		

LEAD ASSIGNMENTS

HEXFET

1.– GATE
2.– DRAIN
3.– SOURCE
4.– DRAIN

IGBTs, CoPACK

1.– GATE
2.– COLLECTOR
3.– EMITTER
4.– COLLECTOR

DIODES

1.– ANODE/OPEN
2.– CATHODE
3.– ANODE

TO-247AC Part Marking Information

EXAMPLE: THIS IS AN IRFPE30
WITH ASSEMBLY
LOT CODE 5657
ASSEMBLED ON WW 35, 2001
IN THE ASSEMBLY LINE "H"

Note: "P" in assembly line position
indicates "Lead-Free"

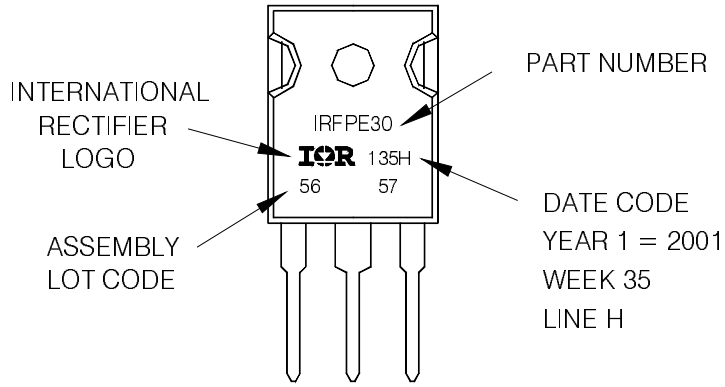

TO-247AC package is not recommended for Surface Mount Application.

Note: For the most current drawing please refer to IR website at http://www.irf.com/package/

TO-247AD Package Outline

Dimensions are shown in millimeters (inches)

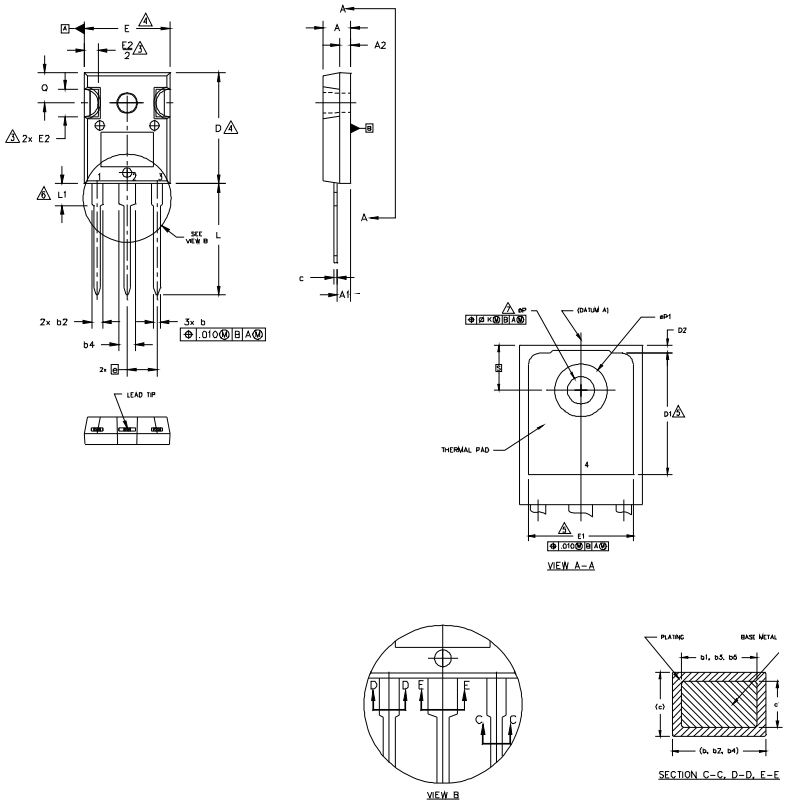

NOTES:

1. DIMENSIONING AND TOLERANCING AS PER ASME Y14.5M 1994.
2. DIMENSIONS ARE SHOWN IN INCHES.
3. CONTOUR OF SLOT OPTIONAL.
4. DIMENSION D & E DO NOT INCLUDE MOLD FLASH. MOLD FLASH SHALL NOT EXCEED .005" (0.127) PER SIDE. THESE DIMENSIONS ARE MEASURED AT THE OUTERMOST EXTREMES OF THE PLASTIC BODY.
5. THERMAL PAD CONTOUR OPTIONAL WITHIN DIMENSIONS D1 & E1.
6. LEAD FINISH UNCONTROLLED IN L1.
7. øP TO HAVE A MAXIMUM DRAFT ANGLE OF 1.5 ° TO THE TOP OF THE PART WITH A MAXIMUM HOLE DIAMETER OF .154 INCH.
8. OUTLINE CONFORMS TO JEDEC OUTLINE TO-247AD.

SYMBOL	DIMENSIONS				NOTES
	INCHES		MILLIMETERS		
	MIN.	MAX.	MIN.	MAX.	
A	.183	.209	4.65	5.31	
A1	.087	.102	2.21	2.59	
A2	.059	.098	1.50	2.49	
b	.039	.055	0.99	1.40	
b1	.039	.053	0.99	1.35	
b2	.065	.094	1.65	2.39	
b3	.065	.092	1.65	2.34	
b4	.102	.135	2.59	3.43	
b5	.102	.133	2.59	3.38	
c	.015	.035	0.38	0.89	
c1	.015	.033	0.38	0.84	
D	.776	.815	19.71	20.70	4
D1	.515	–	13.08	–	5
D2	.020	.053	0.51	1.35	
E	.602	.625	15.29	15.87	4
E1	.530	–	13.46	–	
E2	.178	.216	4.52	5.49	
e	.215 BSC		5.46 BSC		
øk	.010		0.25		
L	.780	.827	19.57	21.00	
L1	.146	.169	3.71	4.29	
øP	.140	.144	3.56	3.66	
øP1	–	.291	–	7.39	
Q	.209	.224	5.31	5.69	
S	.217 BSC		5.51 BSC		

LEAD ASSIGNMENTS

HEXFET

1.– GATE
2.– DRAIN
3.– SOURCE
4.– DRAIN

IGBTs, CoPACK

1.– GATE
2.– COLLECTOR
3.– EMITTER
4.– COLLECTOR

DIODES

1.– ANODE/OPEN
2.– CATHODE
3.– ANODE

TO-247AD Part Marking Information

EXAMPLE: THIS IS AN IRGP30B120KD-E
WITH ASSEMBLY
LOT CODE 5657
ASSEMBLED ON WW 35, 2000
IN THE ASSEMBLY LINE "H"

Note: "P" in assembly line position
indicates "Lead-Free"

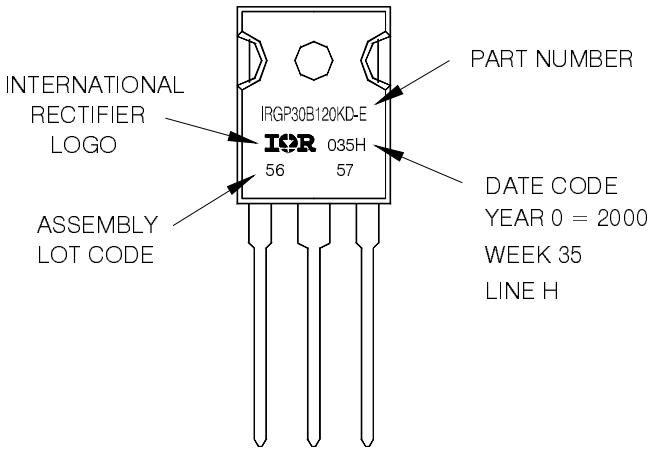

TO-247AD package is not recommended for Surface Mount Application.

Note: For the most current drawing please refer to IR website at http://www.irf.com/package/

Data and specifications subject to change without notice.
This product has been designed and qualified for Industrial market.
Qualification Standards can be found on IR's Web site.

International
IOR Rectifier

IR WORLD HEADQUARTERS: 233 Kansas St., El Segundo, California 90245, USA Tel: (310) 252-7105
TAC Fax: (310) 252-7903
Visit us at www.irf.com for sales contact information. 07/09