80A, 80V N-CHANNEL POWER MOSFET

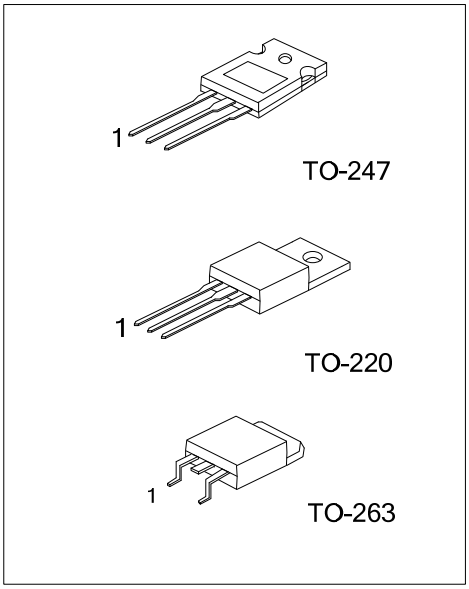

■ DESCRIPTION

The UTC **80N08** is an N-channel MOSFET using UTC advanced technology. It can be used in applications, such as power supply (secondary synchronous rectification), industrial and primary switch etc.

■ FEATURES

* Trench FET Power MOSFETS Technology

■ SYMBOL

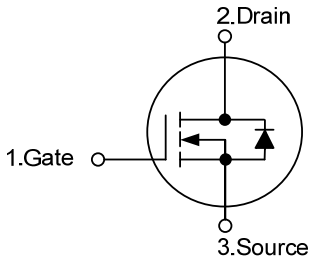

■ ORDERING INFORMATION

Ordering Number		Package	Pin Assignment			Packing
Lead Free	Halogen Free		1	2	3	
80N08L-T47-T	80N08G-T47-T	TO-247	G	D	S	Tube
80N08L-TA3-T	80N08G-TA3-T	TO-220	G	D	S	Tube
80N08L-TQ2-T	80N08G-TQ2-T	TO-263	G	D	S	Tube
80N08L-TQ2-R	80N08G-TQ2-R	TO-263	G	D	S	Tape Reel

Note: G: GND, D: Drain, S: Source

80N08L-T47-T (1)Packing Type (2)Package Type (3)Halogen Free	(1) T: Tube, R: Tape Reel (2) T47: TO-247, TA3: TO-220, TQ2: TO-263 (3) L: Lead Free, G: Halogen Free

Copyright © 2013 Unisonic Technologies Co., Ltd

■ ABSOLUTE MAXIMUM RATINGS (T_J= 25 °C, unless otherwise specified)

PARAMETER		SYMBOL	RATINGS	UNIT
Gate Source Voltage		V_{GS}	±20	V
Continuous Drain Current		I_D	80	A
Pulsed Drain Current		I_{DM}	320	A
Avalanche Energy, Single Pulse		E_{AS}	810	mJ
Power Dissipation	TO-247	P_D	300	W
	TO-220/TO-263		250	W
Junction Temperature		T_J	+150	°C
Storage Temperature		T_{STG}	-55 ~ +150	°C

Note: Absolute maximum ratings are those values beyond which the device could be permanently damaged. Absolute maximum ratings are stress ratings only and functional device operation is not implied.
L=0.1mH, I_{AS}=80A, V_{DD}=25V, R_G=20Ω, Starting T_J =25°C.

■ THERMAL DATA

PARAMETER		SYMBOL	RATINGS	UNIT
Junction to Ambient	TO-247	θ_{JA}	30	°C/W
	TO-220/TO-263		62	
Junction to Case	TO-247	θ_{JC}	0.42	°C/W
	TO-220/TO-263		0.5	

■ ELECTRICAL CHARACTERISTICS (T_J =25°C, unless otherwise specified)

PARAMETER	SYMBOL	TEST CONDITIONS	MIN	TYP	MAX	UNIT
OFF CHARACTERISTICS						
Drain-Source Breakdown Voltage	BV_{DSS}	I_D=1mA, V_{GS}=0V	80			V
Drain-Source Leakage Current	I_{DSS}	V_{DS}=80V, V_{GS}=0V, T_J=25°C		0.01	1	μA
Gate-Source Leakage Current	I_{GSS}	V_{DS}=0V, V_{GS}=±20V		±1	±100	nA
ON CHARACTERISTICS						
Gate Threshold Voltage	$V_{GS(TH)}$	V_{DS}=V_{GS}, I_D=250μA	2.1	3.0	4.0	V
Static Drain-Source On-State Resistance	$R_{DS(ON)}$	V_{GS}=10V, I_D=80A			12	mΩ
DYNAMIC PARAMETERS						
Input Capacitance	C_{ISS}	V_{GS}=0V, V_{DS}=25V, f=1.0MHz		4700		pF
Output Capacitance	C_{OSS}			1260		pF
Reverse Transfer Capacitance	C_{RSS}			580		pF
SWITCHING PARAMETERS						
Gate to Source Charge	Q_{GS}	V_{DD}=60V, V_{GS}=0~10V, I_D=80A		25	37	nC
Gate to Drain Charge	Q_{GD}			69	116	nC
Total Gate Charge	Q_G			144	180	nC
Turn-ON Delay Time	$t_{D(ON)}$	V_{DD}=40V, R_G=2.2Ω, I_D=80A, V_{GS}=10V		26		ns
Rise Time	t_R			50		ns
Turn-OFF Delay Time	$t_{D(OFF)}$			61		ns
Fall-Time	t_F			30		ns
SOURCE- DRAIN DIODE RATINGS AND CHARACTERISTICS						
Maximum Body-Diode Continuous Current	I_S				80	A
Pulsed Current	I_{SM}				320	
Drain-Source Diode Forward Voltage	V_{SD}	I_{SD}=80A		0.9	1.3	V
Reverse Recovery Time	t_{RR}	I_F= I_S, dI_F/dt=100A/μs		110	140	ns
Reverse Recovery Charge	Q_{RR}	V_R=40V		470	590	nC

Note: 1. Defined by design. Not subject to production test.
2. Qualified at -20V and +20V.

UTC assumes no responsibility for equipment failures that result from using products at values that exceed, even momentarily, rated values (such as maximum ratings, operating condition ranges, or other parameters) listed in products specifications of any and all UTC products described or contained herein. UTC products are not designed for use in life support appliances, devices or systems where malfunction of these products can be reasonably expected to result in personal injury. Reproduction in whole or in part is prohibited without the prior written consent of the copyright owner. The information presented in this document does not form part of any quotation or contract, is believed to be accurate and reliable and may be changed without notice.