Silicon NPN Power Transistors MJF18006

DESCRIPTION

·With TO-220F package
·High voltage ,high speed

APPLICATIONS

·Designed for use in 220V line-operated switchmode power supplies and electronic light ballasts

PINNING

PIN	DESCRIPTION
1	Base
2	Collector
3	Emitter

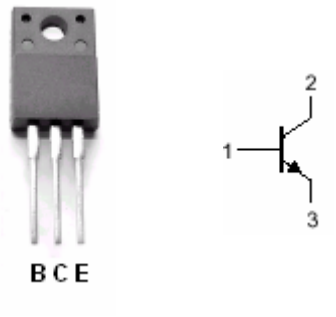

Fig.1 simplified outline (TO-220F) and symbol

ABSOLUTE MAXIMUM RATINGS(T_C=25□)

SYMBOL	PARAMETER	CONDITIONS	VALUE	UNIT
V_{CBO}	Collector-base voltage	Open emitter	1000	V
V_{CEO}	Collector-emitter voltage	Open base	450	V
V_{EBO}	Emitter-base voltage	Open collector	9	V
I_C	Collector current (DC)		6	A
I_{CM}	Collector current-Peak		15	A
I_B	Base current		4	A
I_{BM}	Base current-Peak		8	A
P_D	Total power dissipation	T_C=25□	40	W
T_j	Junction temperature		150	□
T_{stg}	Storage temperature		-65~150	□

THERMAL CHARACTERISTICS

SYMBOL	PARAMETER	MAX	UNIT
$R_{th\ j\text{-}C}$	Thermal resistance junction to case	3.12	□/W
$R_{th\ j\text{-}A}$	Thermal resistance junction to ambient	62.5	□/W

CHARACTERISTICS

Tj=25□ unless otherwise specified

SYMBOL	PARAMETER	CONDITIONS		MIN	TYP.	MAX	UNIT
$V_{CEO(SUS)}$	Collector-emitter sustaining voltage	I_C=0.1A; L=25mH		450			V
$V_{CE(sat)-1}$	Collector-emitter saturation voltage	I_C=1.5A ;I_B=0.15A T_C=125□				0.6 0.65	V
$V_{CE(sat)-2}$	Collector-emitter saturation voltage	I_C=3A ;I_B=0.6A T_C=125□				0.7 0.8	V
$V_{BE(sat)-1}$	Base-emitter saturation voltage	I_C=1.5A; I_B=0.15A				1.2	V
$V_{BE(sat)-2}$	Base-emitter saturation voltage	I_C=3A; I_B=0.6A				1.3	V
I_{CES}	Collector cut-off current	V_{CES}=Rated$V_{CES;}$ V_{EB}=0				0.1	mA
			T_C=125□			0.5	
		V_{CES}=800V				0.1	
I_{CEO}	Collector cut-off current	V_{CE}=RatedV_{CEO}; I_B=0				0.1	mA
I_{EBO}	Emitter cut-off current	V_{EB}=9V; I_C=0				0.1	mA
h_{FE-1}	DC current gain	I_C=0.5A ; V_{CE}=5V		14		34	
h_{FE-2}	DC current gain	I_C=3A ; V_{CE}=1V		6			
h_{FE-3}	DC current gain	I_C=1.5A ; V_{CE}=1V		11			
h_{FE-4}	DC current gain	I_C=10mA ; V_{CE}=5V		10			
f_T	Transition frequency	I_C=0.5A ; V_{CE}=10V;f=1.0MHz			14		MHz
C_{OB}	Collector outoput capacitance	I_E=0 ; V_{CB}=10V;f=1.0MHz			75		pF
Switching times resistive load,Duty Cycle≤10%,Pulse Width=20μs							
t_{on}	Turn-on time	V_{CC}=300V ,I_C=3A I_{B1}=0.6A; I_{B2}=1.5A			90	180	ns
t_{off}	Turn-off time				1.7	2.5	μs
t_{on}	Turn-on time	V_{CC}=300V ,I_C=1.3A I_{B1}=0.13A; I_{B2}=0.65A			0.2	0.3	μs
t_{off}	Turn-off time				1.2	2.5	μs

PACKAGE OUTLINE

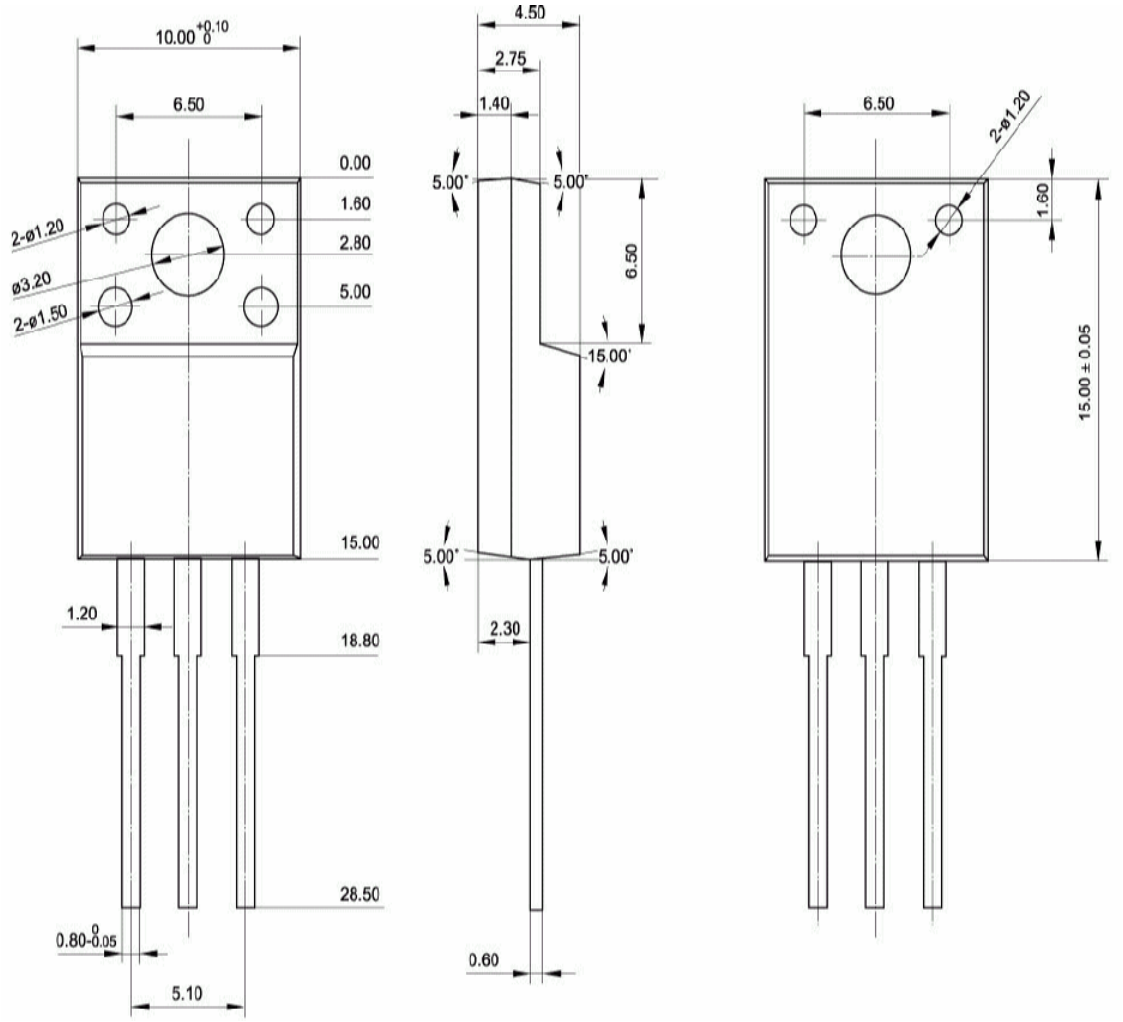

Fig.2 Outline dimensions