To our customers,

Old Company Name in Catalogs and Other Documents

On April 1st, 2010, NEC Electronics Corporation merged with Renesas Technology Corporation, and Renesas Electronics Corporation took over all the business of both companies. Therefore, although the old company name remains in this document, it is a valid Renesas Electronics document. We appreciate your understanding.

Renesas Electronics website: http://www.renesas.com

April 1st, 2010
Renesas Electronics Corporation

Issued by: Renesas Electronics Corporation (http://www.renesas.com)

Send any inquiries to http://www.renesas.com/inquiry.

Notice

1. All information included in this document is current as of the date this document is issued. Such information, however, is subject to change without any prior notice. Before purchasing or using any Renesas Electronics products listed herein, please confirm the latest product information with a Renesas Electronics sales office. Also, please pay regular and careful attention to additional and different information to be disclosed by Renesas Electronics such as that disclosed through our website.
2. Renesas Electronics does not assume any liability for infringement of patents, copyrights, or other intellectual property rights of third parties by or arising from the use of Renesas Electronics products or technical information described in this document. No license, express, implied or otherwise, is granted hereby under any patents, copyrights or other intellectual property rights of Renesas Electronics or others.
3. You should not alter, modify, copy, or otherwise misappropriate any Renesas Electronics product, whether in whole or in part.
4. Descriptions of circuits, software and other related information in this document are provided only to illustrate the operation of semiconductor products and application examples. You are fully responsible for the incorporation of these circuits, software, and information in the design of your equipment. Renesas Electronics assumes no responsibility for any losses incurred by you or third parties arising from the use of these circuits, software, or information.
5. When exporting the products or technology described in this document, you should comply with the applicable export control laws and regulations and follow the procedures required by such laws and regulations. You should not use Renesas Electronics products or the technology described in this document for any purpose relating to military applications or use by the military, including but not limited to the development of weapons of mass destruction. Renesas Electronics products and technology may not be used for or incorporated into any products or systems whose manufacture, use, or sale is prohibited under any applicable domestic or foreign laws or regulations.
6. Renesas Electronics has used reasonable care in preparing the information included in this document, but Renesas Electronics does not warrant that such information is error free. Renesas Electronics assumes no liability whatsoever for any damages incurred by you resulting from errors in or omissions from the information included herein.
7. Renesas Electronics products are classified according to the following three quality grades: “Standard”, “High Quality”, and “Specific”. The recommended applications for each Renesas Electronics product depends on the product’s quality grade, as indicated below. You must check the quality grade of each Renesas Electronics product before using it in a particular application. You may not use any Renesas Electronics product for any application categorized as “Specific” without the prior written consent of Renesas Electronics. Further, you may not use any Renesas Electronics product for any application for which it is not intended without the prior written consent of Renesas Electronics. Renesas Electronics shall not be in any way liable for any damages or losses incurred by you or third parties arising from the use of any Renesas Electronics product for an application categorized as “Specific” or for which the product is not intended where you have failed to obtain the prior written consent of Renesas Electronics. The quality grade of each Renesas Electronics product is “Standard” unless otherwise expressly specified in a Renesas Electronics data sheets or data books, etc.

   “Standard”: Computers; office equipment; communications equipment; test and measurement equipment; audio and visual equipment; home electronic appliances; machine tools; personal electronic equipment; and industrial robots.

   “High Quality”: Transportation equipment (automobiles, trains, ships, etc.); traffic control systems; anti-disaster systems; anti-crime systems; safety equipment; and medical equipment not specifically designed for life support.

   “Specific”: Aircraft; aerospace equipment; submersible repeaters; nuclear reactor control systems; medical equipment or systems for life support (e.g. artificial life support devices or systems), surgical implantations, or healthcare intervention (e.g. excision, etc.), and any other applications or purposes that pose a direct threat to human life.
8. You should use the Renesas Electronics products described in this document within the range specified by Renesas Electronics, especially with respect to the maximum rating, operating supply voltage range, movement power voltage range, heat radiation characteristics, installation and other product characteristics. Renesas Electronics shall have no liability for malfunctions or damages arising out of the use of Renesas Electronics products beyond such specified ranges.
9. Although Renesas Electronics endeavors to improve the quality and reliability of its products, semiconductor products have specific characteristics such as the occurrence of failure at a certain rate and malfunctions under certain use conditions. Further, Renesas Electronics products are not subject to radiation resistance design. Please be sure to implement safety measures to guard them against the possibility of physical injury, and injury or damage caused by fire in the event of the failure of a Renesas Electronics product, such as safety design for hardware and software including but not limited to redundancy, fire control and malfunction prevention, appropriate treatment for aging degradation or any other appropriate measures. Because the evaluation of microcomputer software alone is very difficult, please evaluate the safety of the final products or system manufactured by you.
10. Please contact a Renesas Electronics sales office for details as to environmental matters such as the environmental compatibility of each Renesas Electronics product. Please use Renesas Electronics products in compliance with all applicable laws and regulations that regulate the inclusion or use of controlled substances, including without limitation, the EU RoHS Directive. Renesas Electronics assumes no liability for damages or losses occurring as a result of your noncompliance with applicable laws and regulations.
11. This document may not be reproduced or duplicated, in any form, in whole or in part, without prior written consent of Renesas Electronics.
12. Please contact a Renesas Electronics sales office if you have any questions regarding the information contained in this document or Renesas Electronics products, or if you have any other inquiries.

(Note 1) “Renesas Electronics” as used in this document means Renesas Electronics Corporation and also includes its majority-owned subsidiaries.

(Note 2) “Renesas Electronics product(s)” means any product developed or manufactured by or for Renesas Electronics.

RENESAS

MOS FIELD EFFECT TRANSISTOR

2SK3114B

SWITCHING
N-CHANNEL POWER MOS FET

DESCRIPTION

The 2SK3114B is N-channel MOS FET device that features a low gate charge and excellent switching characteristics, and designed for high voltage applications such as switching power supply, AC adapter.

ORDERING INFORMATION

PART NUMBER	PACKAGE
2SK3114B-S17-AY Note	Isolated TO-220

Note Pb-free (This product does not contain Pb in External electrode.)

FEATURES

- Low on-state resistance
  $R_{DS(on)}$ = 2.2 Ω MAX. (V_{GS} = 10 V, I_D = 2.0 A)
- Low gate charge
  Q_G = 13.6 nC TYP. (V_{DD} = 450 V, V_{GS} = 10 V, I_D = 4.0 A)
- Gate voltage rating : ±30 V
- Avalanche capability ratings
- Isolated TO-220 package

(Isolated TO-220)

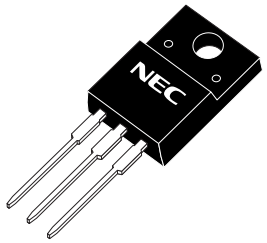

ABSOLUTE MAXIMUM RATINGS (T_A = 25°C)

Drain to Source Voltage (V_{GS} = 0 V)	V_{DSS}	600	V
Gate to Source Voltage (V_{DS} = 0 V)	V_{GSS}	±30	V
Drain Current (DC) (T_C = 25°C)	$I_{D(DC)}$	±4.0	A
Drain Current (pulse) Note1	$I_{D(pulse)}$	±16	A
Total Power Dissipation (T_C = 25°C)	P_{T1}	30	W
Total Power Dissipation (T_A = 25°C)	P_{T2}	2.0	W
Channel Temperature	T_{ch}	150	°C
Storage Temperature	T_{stg}	−55 to +150	°C
Single Avalanche Current Note2	I_{AS}	4.0	A
Single Avalanche Energy Note2	E_{AS}	10.7	mJ

Notes 1. PW ≤ 10 μs, Duty cycle ≤ 1%

2. Starting T_{ch} = 25°C, V_{DD} = 150 V, R_G = 25 Ω, V_{GS} = 20 → 0 V

The information in this document is subject to change without notice. Before using this document, please confirm that this is the latest version.
Not all devices/types available in every country. Please check with local NEC representative for availability and additional information.

Document No. D18062EJ2V0DS00 (2nd edition)
Date Published August 2006 NS CP(K)
Printed in Japan

© NEC Electronics Corporation 2006

The mark <R> shows major revised points.
The revised points can be easily searched by copying an "<R>" in the PDF file and specifying it in the "Find what:" field.

ELECTRICAL CHARACTERISTICS (T_A = 25°C)

Characteristics	Symbol	Test Conditions	MIN.	TYP.	MAX.	Unit
Zero Gate Voltage Drain Current	I_{DSS}	V_{DS} = 600 V, V_{GS} = 0 V			100	μA
Gate Leakage Current	I_{GSS}	V_{GS} = ±30 V, V_{DS} = 0 V			±10	μA
Gate Cut-off Voltage	$V_{GS(off)}$	V_{DS} = 10 V, I_D = 1 mA	2.5		3.5	V
Forward Transfer Admittance Note	$\|y_{fs}\|$	V_{DS} = 10 V, I_D = 2.0 A	1.0	1.7		S
Drain to Source On-state Resistance Note	$R_{DS(on)}$	V_{GS} = 10 V, I_D = 2.0 A		1.7	2.2	Ω
Input Capacitance	C_{iss}	V_{DS} = 10 V		590		pF
Output Capacitance	C_{oss}	V_{GS} = 0 V		115		pF
Reverse Transfer Capacitance	C_{rss}	f = 1 MHz		7		pF
Turn-on Delay Time	$t_{d(on)}$	V_{DD} = 150 V, I_D = 2.0 A		14.5		ns
Rise Time	t_r	V_{GS} = 10 V		10		ns
Turn-off Delay Time	$t_{d(off)}$	R_G = 10 Ω		23		ns
Fall Time	t_f	R_L = 10 Ω		10		ns
Total Gate Charge	Q_G	V_{DD} = 450 V		13.6		nC
Gate to Source Charge	Q_{GS}	V_{GS} = 10 V		4.9		nC
Gate to Drain Charge	Q_{GD}	I_D = 4.0 A		5.5		nC
Body Diode Forward Voltage Note	$V_{F(S-D)}$	I_F = 4.0 A, V_{GS} = 0 V		0.9		V
Reverse Recovery Time	T_{rr}	I_F = 4.0 A, V_{GS} = 0 V		277		nS
Reverse Recovery Charge	Q_{rr}	di/dt = 50 A/μs		1090		nC

Note Pulsed

TEST CIRCUIT 1 AVALANCHE CAPABILITY

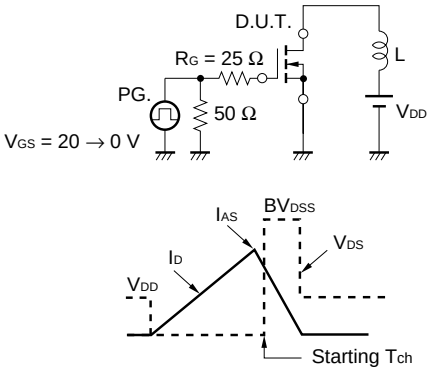

TEST CIRCUIT 2 SWITCHING TIME

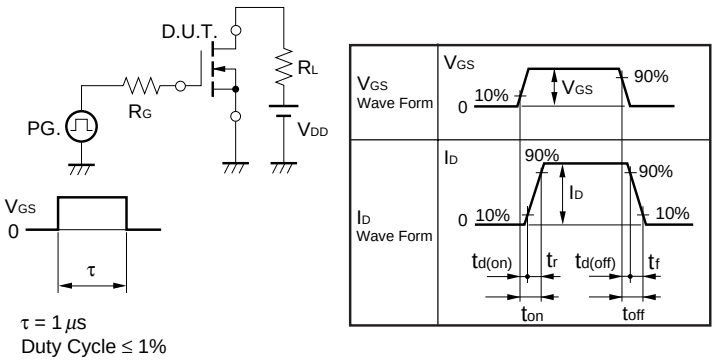

TEST CIRCUIT 3 GATE CHARGE

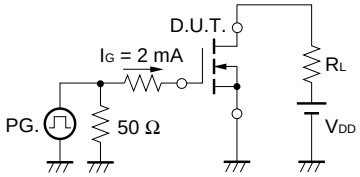

TYPICAL CHARACTERISTICS (T_A = 25°C)

DERATING FACTOR OF FORWARD BIAS SAFE OPERATING AREA

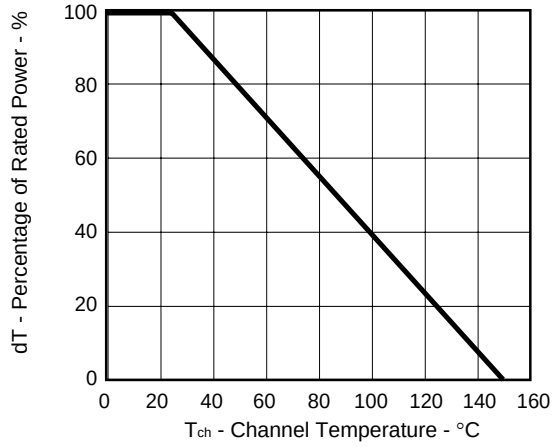

TOTAL POWER DISSIPATION vs. CASE TEMPERATURE

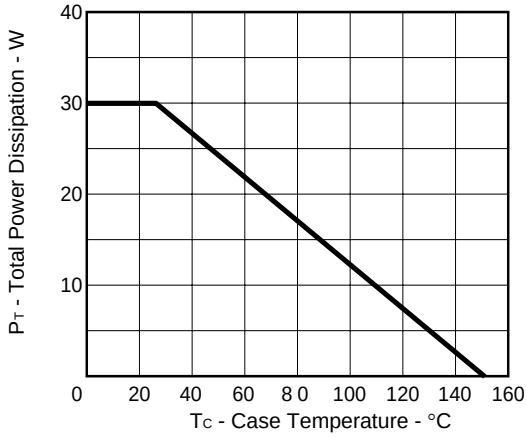

FORWARD BIAS SAFE OPERATING AREA

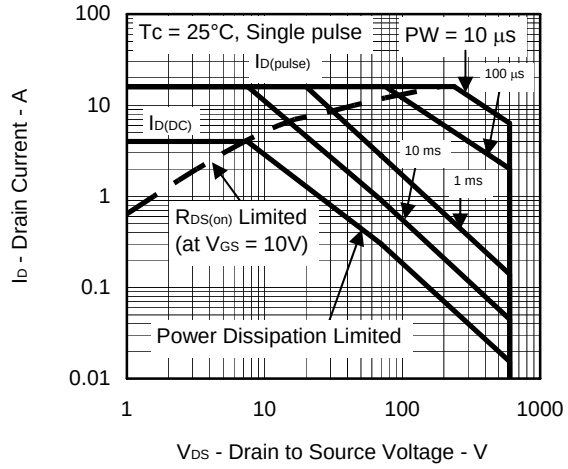

TRANSIENT THERMAL RESISTANCE vs. PULSE WIDTH

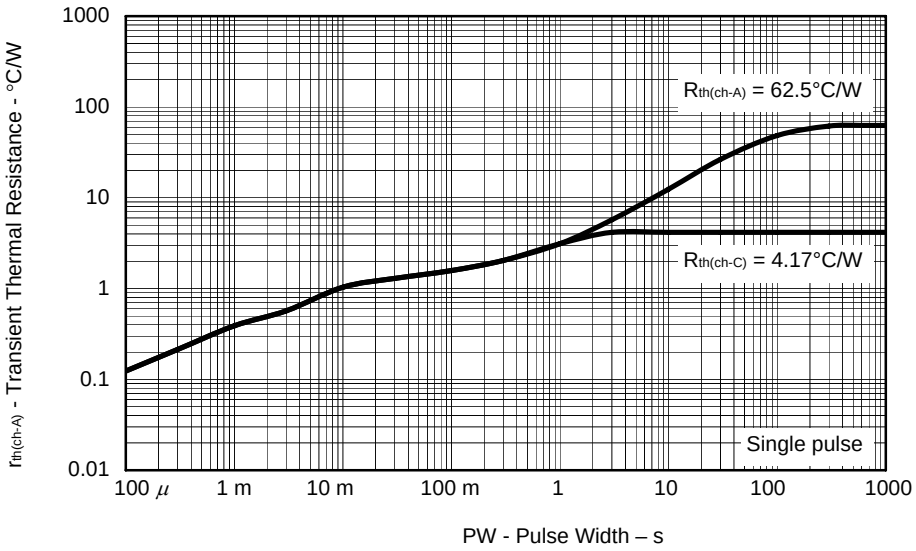

DRAIN CURRENT vs.
DRAIN TO SOURCE VOLTAGE

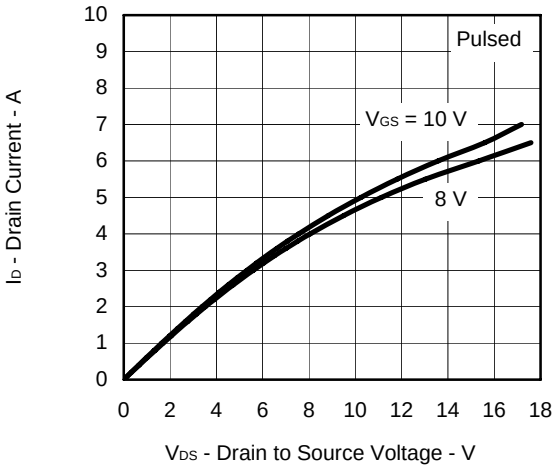

FORWARD TRANSFER CHARACTERISTICS

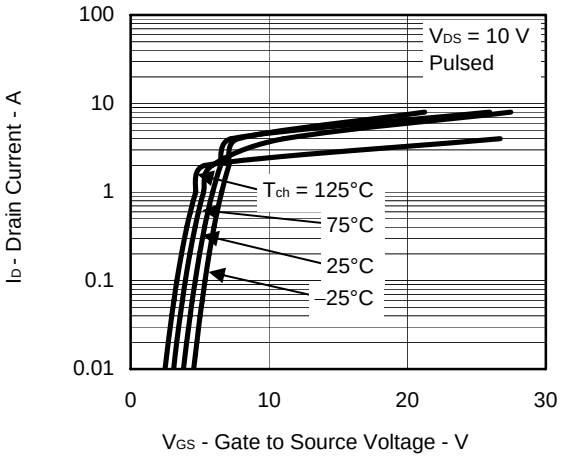

GATE TO SOURCE CUT-OFF VOLTAGE
vs.
CHANNEL TEMPERATURE

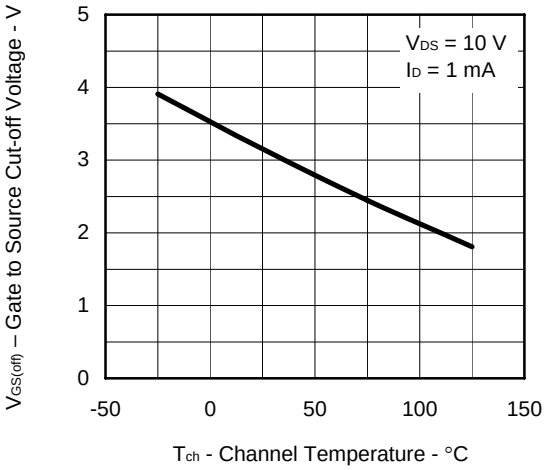

FORWARD TRANSFER ADMITTANCE vs.
DRAIN CURRENT

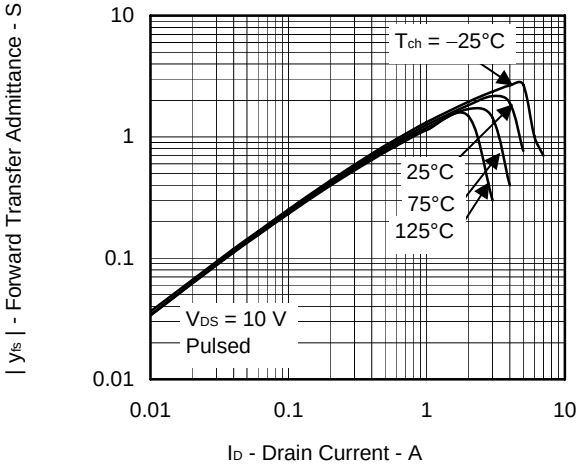

DRAIN TO SOURCE ON-STATE RESISTANCE vs.
GATE TO SOURCE VOLTAGE

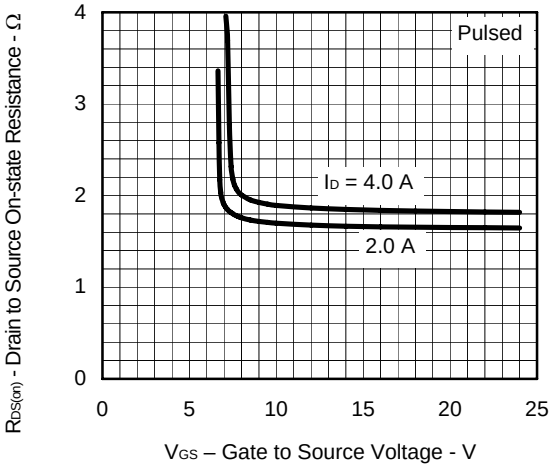

DRAIN TO SOURCE ON-STATE
RESISTANCE vs. DRAIN CURRENT

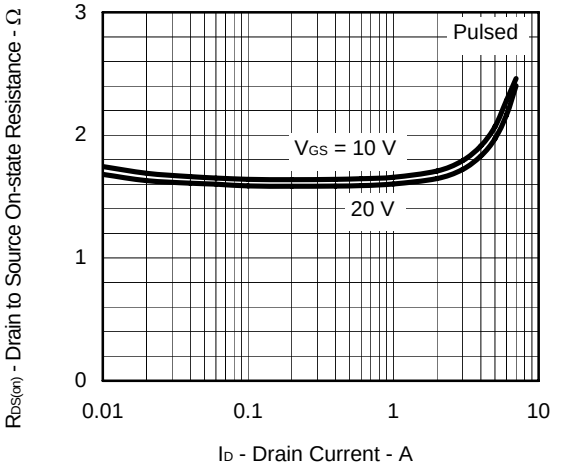

<R>

DRAIN TO SOURCE ON-STATE RESISTANCE vs. CHANNEL TEMPERATURE

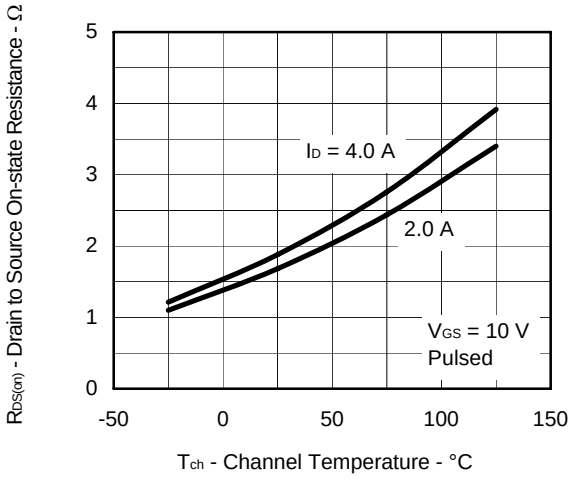

SOURCE TO DRAIN DIODE FORWARD VOLTAGE

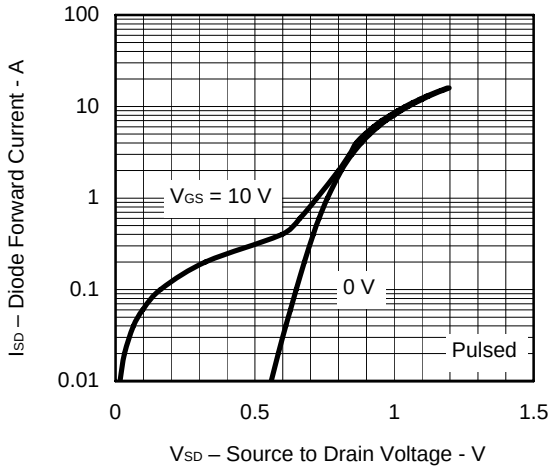

CAPACITANCE vs. DRAIN TO SOURCE VOLTAGE

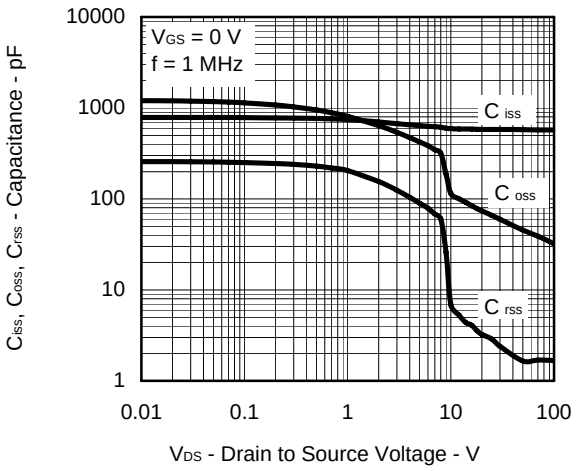

SWITCHING CHARACTERISTICS

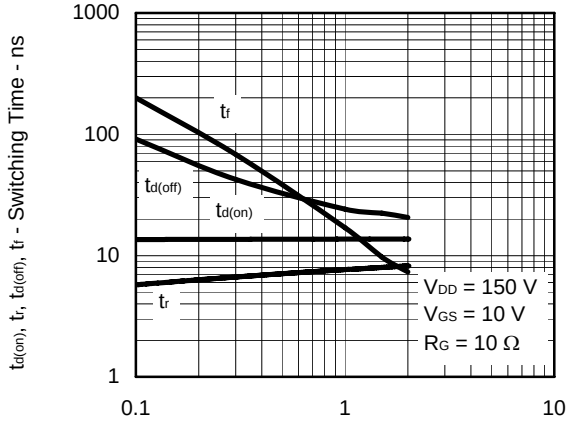

REVWESE RECOVERY TIME vs. DRAIN CURRENT

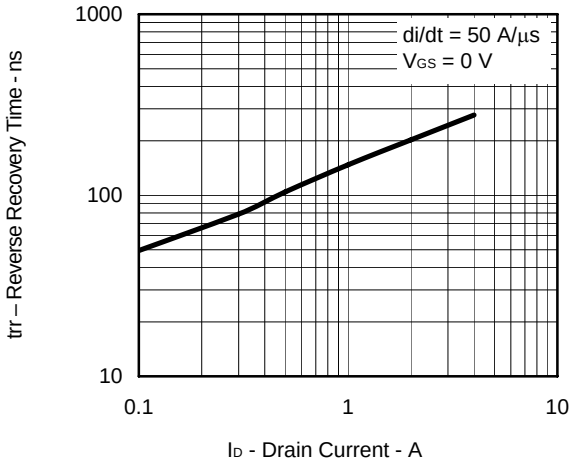

DYNAMIC INPUT/OUTPUT CHARACTERISTICS

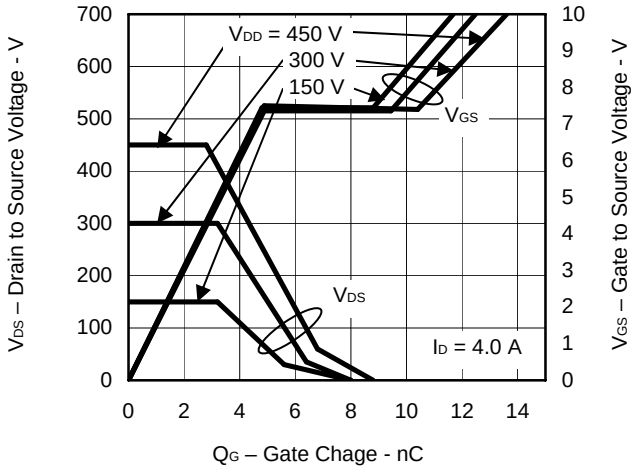

SINGLE AVALANCHE CURRENT vs.
INDUCTIVE LOAD

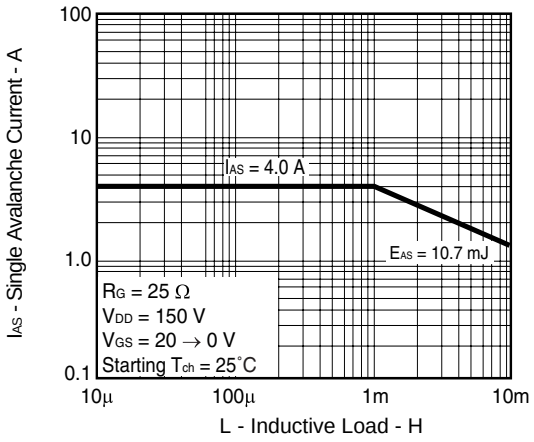

SINGLE AVALANCHE ENERGY
DERATING FACTOR

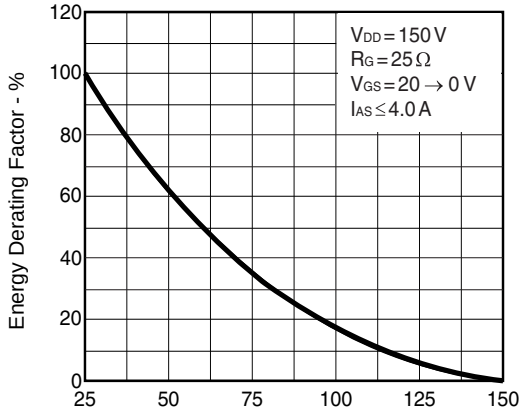

PACKAGE DRAWING (Unit: mm)

Isolated TO-220 (MP-45F)

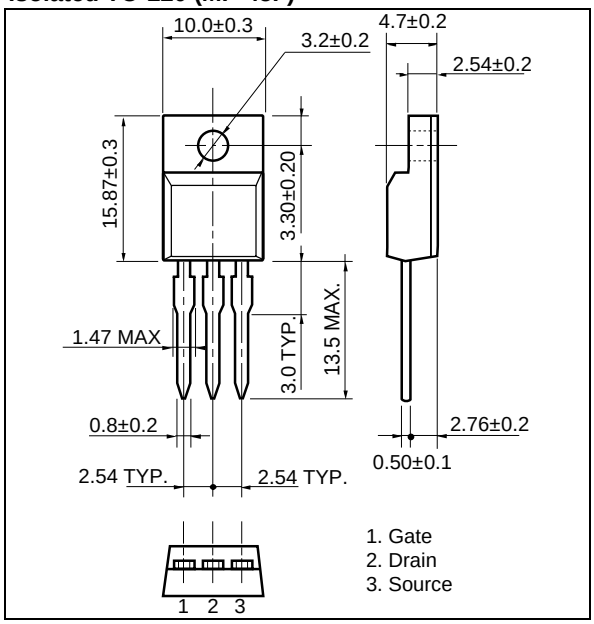

EQUIVALENT CIRCUIT

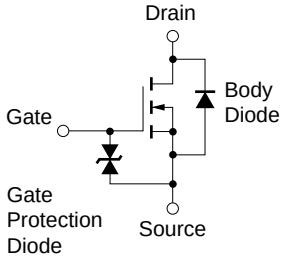

Remark The diode connected between the gate and source of the transistor serves as a protector against ESD. When this device actually used, an additional protection circuit is externally required if a voltage exceeding the rated voltage may be applied to this device.

- **The information in this document is current as of August, 2006. The information is subject to change without notice. For actual design-in, refer to the latest publications of NEC Electronics data sheets or data books, etc., for the most up-to-date specifications of NEC Electronics products. Not all products and/or types are available in every country. Please check with an NEC Electronics sales representative for availability and additional information.**
- No part of this document may be copied or reproduced in any form or by any means without the prior written consent of NEC Electronics. NEC Electronics assumes no responsibility for any errors that may appear in this document.
- NEC Electronics does not assume any liability for infringement of patents, copyrights or other intellectual property rights of third parties by or arising from the use of NEC Electronics products listed in this document or any other liability arising from the use of such products. No license, express, implied or otherwise, is granted under any patents, copyrights or other intellectual property rights of NEC Electronics or others.
- Descriptions of circuits, software and other related information in this document are provided for illustrative purposes in semiconductor product operation and application examples. The incorporation of these circuits, software and information in the design of a customer's equipment shall be done under the full responsibility of the customer. NEC Electronics assumes no responsibility for any losses incurred by customers or third parties arising from the use of these circuits, software and information.
- While NEC Electronics endeavors to enhance the quality, reliability and safety of NEC Electronics products, customers agree and acknowledge that the possibility of defects thereof cannot be eliminated entirely. To minimize risks of damage to property or injury (including death) to persons arising from defects in NEC Electronics products, customers must incorporate sufficient safety measures in their design, such as redundancy, fire-containment and anti-failure features.
- NEC Electronics products are classified into the following three quality grades: "Standard", "Special" and "Specific".

  The "Specific" quality grade applies only to NEC Electronics products developed based on a customer-designated "quality assurance program" for a specific application. The recommended applications of an NEC Electronics product depend on its quality grade, as indicated below. Customers must check the quality grade of each NEC Electronics product before using it in a particular application.

  "Standard": Computers, office equipment, communications equipment, test and measurement equipment, audio and visual equipment, home electronic appliances, machine tools, personal electronic equipment and industrial robots.

  "Special": Transportation equipment (automobiles, trains, ships, etc.), traffic control systems, anti-disaster systems, anti-crime systems, safety equipment and medical equipment (not specifically designed for life support).

  "Specific": Aircraft, aerospace equipment, submersible repeaters, nuclear reactor control systems, life support systems and medical equipment for life support, etc.

The quality grade of NEC Electronics products is "Standard" unless otherwise expressly specified in NEC Electronics data sheets or data books, etc. If customers wish to use NEC Electronics products in applications not intended by NEC Electronics, they must contact an NEC Electronics sales representative in advance to determine NEC Electronics' willingness to support a given application.

(Note)

(1) "NEC Electronics" as used in this statement means NEC Electronics Corporation and also includes its majority-owned subsidiaries.

(2) "NEC Electronics products" means any product developed or manufactured by or for NEC Electronics (as defined above).