RJP30H2DPK-M0 / RJP30H2A

Silicon N Channel IGBT
High speed power switching

R07DS0467EJ0200
Rev.2.00
Jun 15, 2011

Features

- Trench gate and thin wafer technology (G6H-II series)
- Low collector to emitter saturation voltage: $V_{CE(sat)}$ = 1.4 V typ
- High speed switching: t_f = 100 ns typ, t_f = 180 ns typ
- Low leak current: I_{CES} = 1 μA max

Outline

RENESAS Package code: PRSS0004ZH-A
(Package name: TO-3PSG)

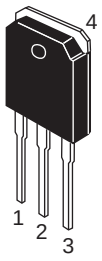

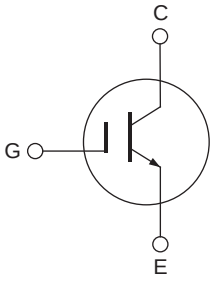

1. Gate
2. Collector
3. Emitter
4. Collector (Flange)

Absolute Maximum Ratings

(Ta = 25°C)

Item	Symbol	Ratings	Unit
Collector to Emitter voltage	V_{CES}	360	V
Gate to Emitter voltage	V_{GES}	±30	V
Collector current	Ic	35	A
Collector peak current	ic(peak) Note1	250	A
Collector dissipation	P_C Note2	60	W
Junction to case thermal impedance	θj-c	2.08	°C/ W
Junction temperature	Tj	150	°C
Storage temperature	Tstg	–55 to +150	°C

Notes: 1. PW ≤ 10 μs, duty cycle ≤ 1%
2. Tc = 25°C

Electrical Characteristics

(Ta = 25°C)

Item	Symbol	Min	Typ	Max	Unit	Test Conditions
Zero gate voltage collector current	I_{CES}	—	—	1	μA	V_{CE} = 360 V, V_{GE} = 0
Gate to emitter leak current	I_{GES}	—	—	±100	nA	V_{GE} = ± 30 V, V_{CE} = 0
Gate to emitter cutoff voltage	$V_{GE(off)}$	2.5	—	5	V	V_{CE} = 10 V, I_C = 1 mA
Collector to emitter saturation voltage	$V_{CE(sat)}$	—	1.4	1.9	V	I_C = 35 A, V_{GE} = 15 V Note3
Input capacitance	Cies	—	1200	—	pF	V_{CE} = 25 V V_{GE} = 0 f = 1 MHz
Output capacitance	Coes	—	60	—	pF	
Reveres transfer capacitance	Cres	—	30	—	pF	
Total gate charge	Qg	—	37	—	nC	V_{GE} = 15 V V_{CE} = 150 V I_C = 35 A
Gate to emitter charge	Qge	—	6	—	nC	
Gate to collector charge	Qgc	—	10	—	nC	
Switching time	$t_{d(on)}$	—	0.02	—	μs	I_C = 35 A R_L = 4.5 Ω V_{GE} = 15 V R_G = 5 Ω
	t_r	—	0.1	—	μs	
	$t_{d(off)}$	—	0.06	—	μs	
	t_f	—	0.18	—	μs	

Notes: 3. Pulse test.

Main Characteristics

Maximum Safe Operation Area

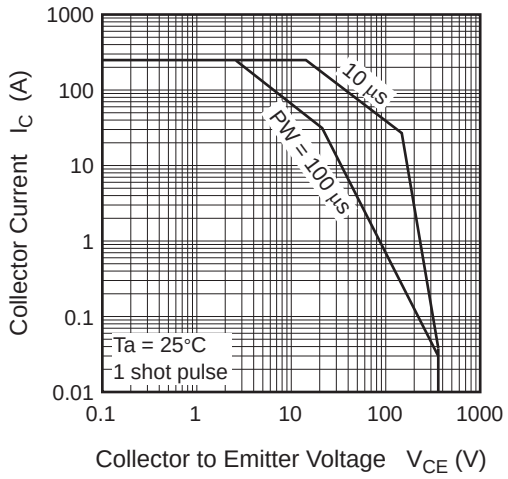

Typical Output Characteristics (1)

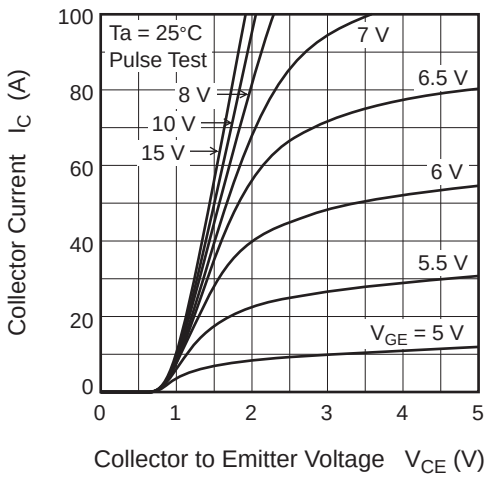

Typical Output Characteristics (2)

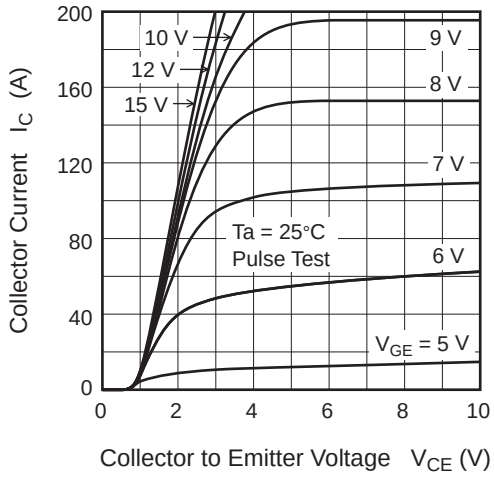

Typical Transfer Characteristics

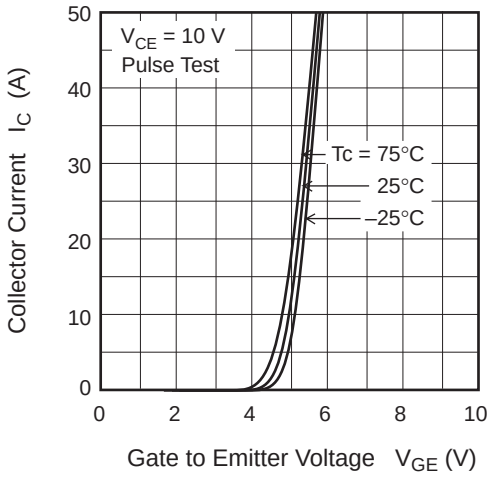

Collector to Emitter Saturation Voltage vs. Gate to Emitter Voltage (Typical)

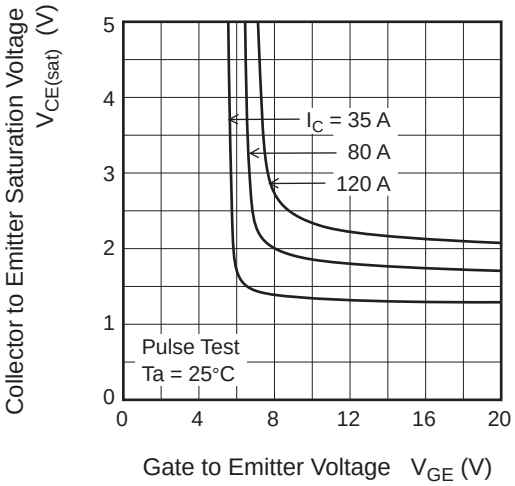

Collector to Emitter Saturation Voltage vs. Collector Current (Typical)

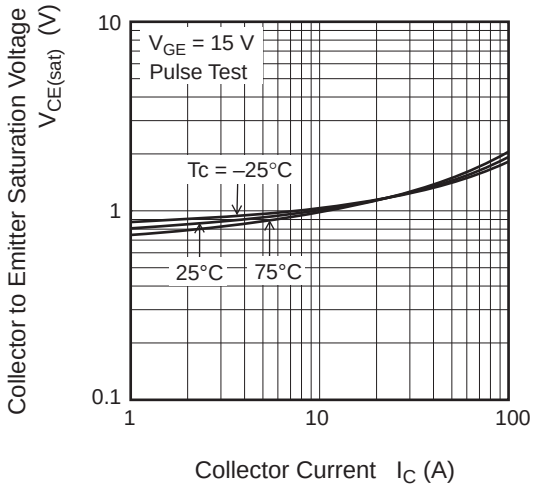

Typical Capacitance vs.
Collector to Emitter Voltage

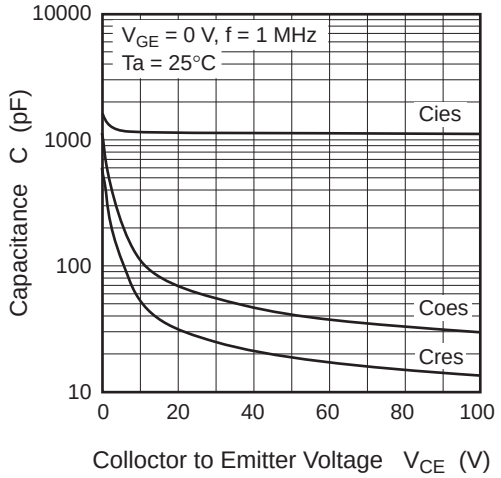

Dynamic Input Characteristics (Typical)

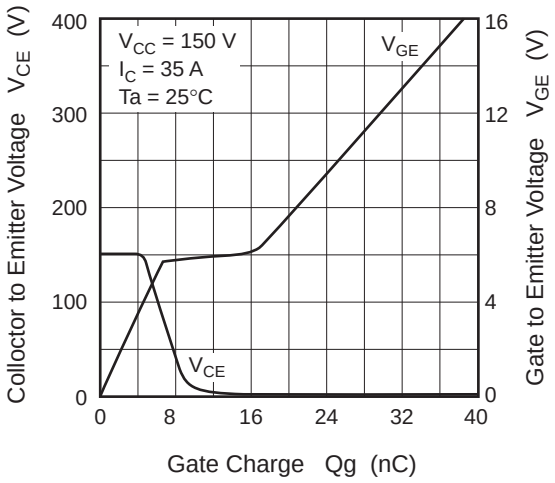

Switching Characteristics (Typical) (1)

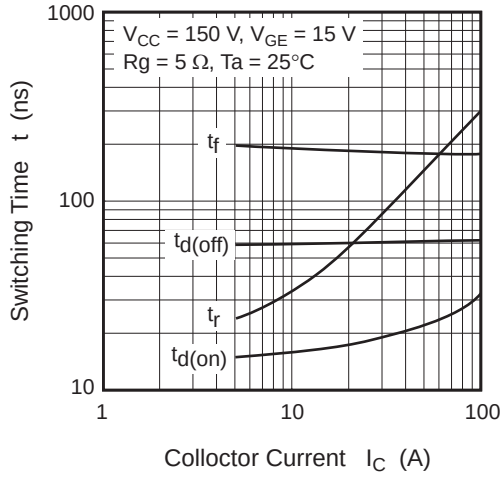

Switching Characteristics (Typical) (2)

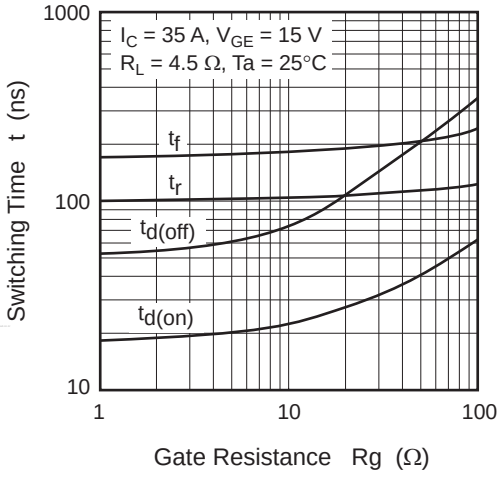

Switching Characteristics (Typical) (3)

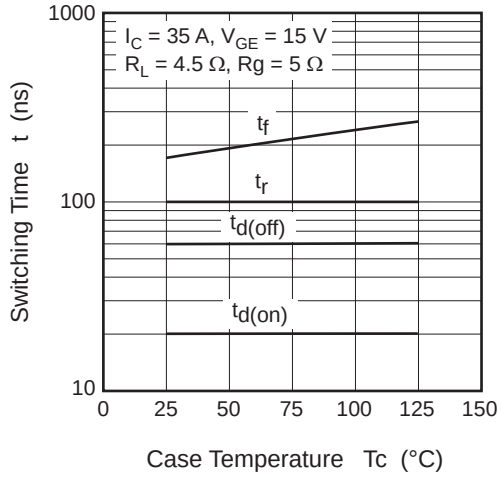

Normalized Transient Thermal Impedance vs. Pulse Width

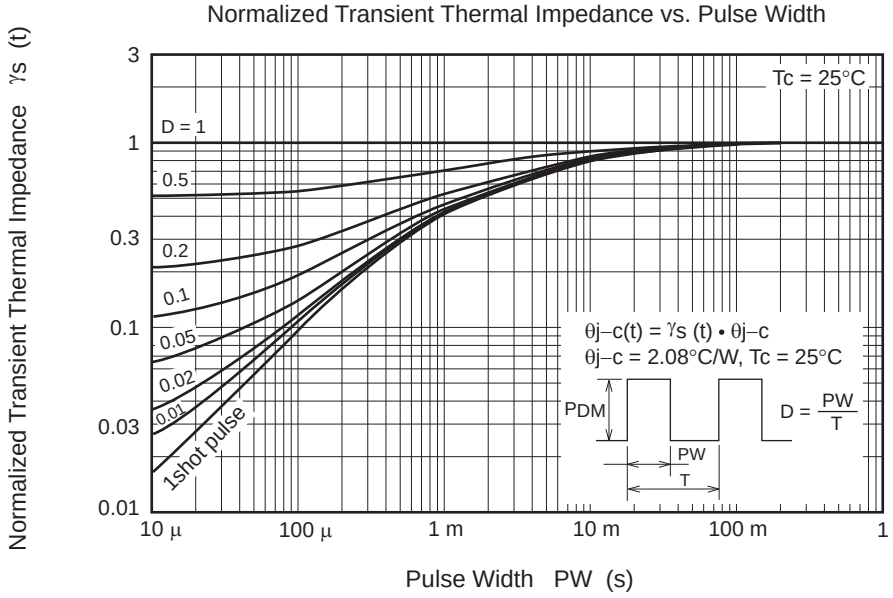

Switching Time Test Circuit

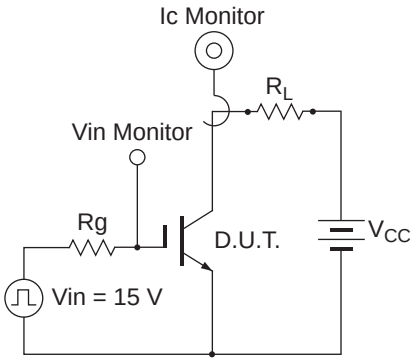

Waveform

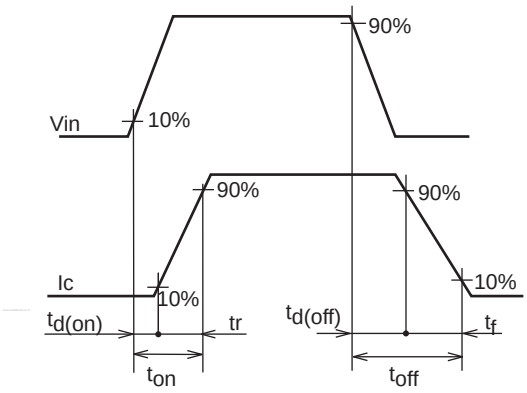

Package Dimension

Package Name	JEITA Package Code	RENESAS Code	Previous Code	MASS[Typ.]
TO-3PSG	—	PRSS0004ZH-A	TO-3PSG/TO-3PSGV	3.7g

Unit: mm

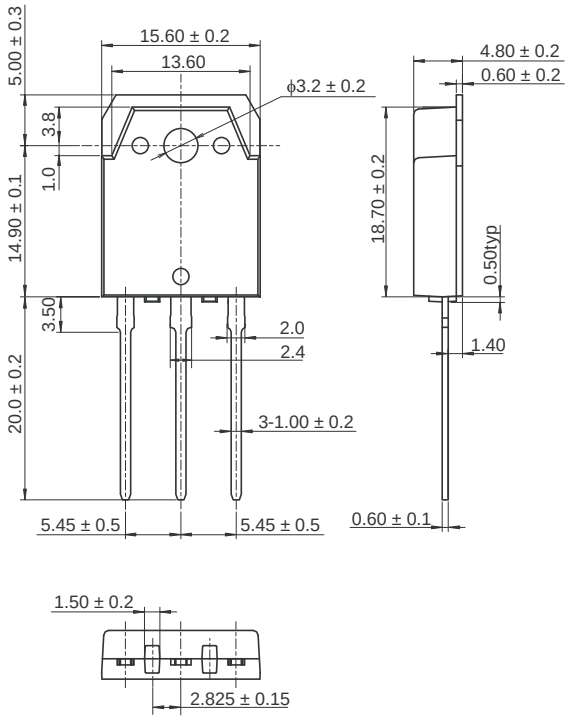

Package
Part Number: RJP30H2A

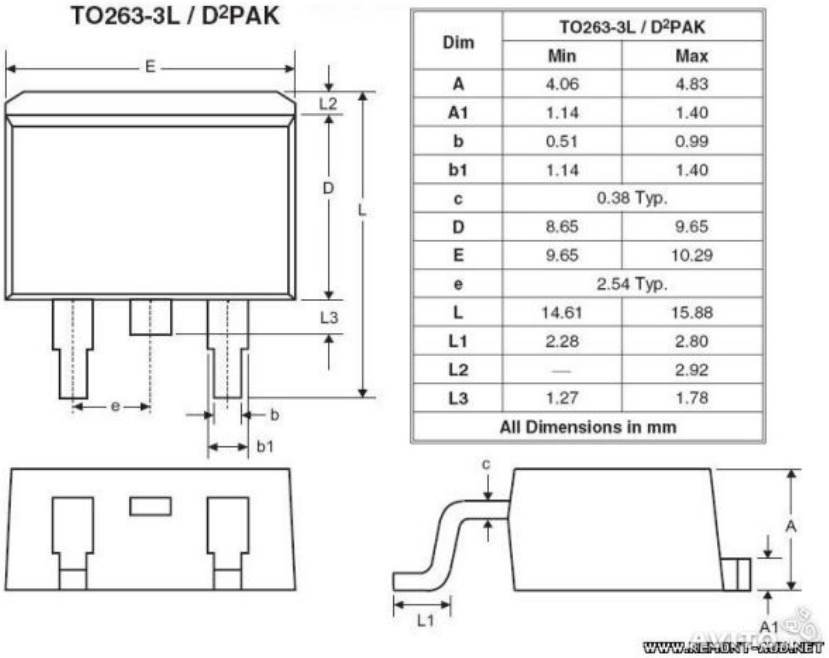

Dim	TO263-3L / D²PAK	
	Min	Max
A	4.06	4.83
A1	1.14	1.40
b	0.51	0.99
b1	1.14	1.40
c	0.38 Typ.	
D	8.65	9.65
E	9.65	10.29
e	2.54 Typ.	
L	14.61	15.88
L1	2.28	2.80
L2	—	2.92
L3	1.27	1.78
All Dimensions in mm		