Silicon NPN Power Transistors BUF405AFP

DESCRIPTION

・With TO-220F package
・High voltage,high speed

APPLICATIONS

・Switch mode power supplies
・Motor drivers

PINNING

PIN	DESCRIPTION
1	Base
2	Collector;connected to mounting base
3	Emitter

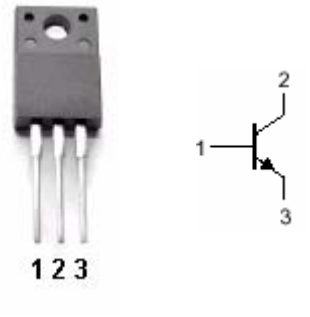

Fig.1 simplified outline (TO-220F) and symbol

Absolute maximum ratings(Ta=25℃)

SYMBOL	PARAMETER	CONDITIONS	VALUE	UNIT
V_{CBO}	Collector-base voltage	Open emitter	1000	V
V_{CEO}	Collector-emitter voltage	Open base	450	V
V_{EBO}	Emitter-base voltage	Open collector	7	V
I_C	Collector current (DC)		7.5	A
I_{CM}	Collector current-Peak	t_p<5ms	15	A
I_B	Base current (DC)		3	A
I_{BM}	Base current-Peak	t_p<5ms	4.5	A
P_{tot}	Total power dissipation	T_C=25℃	39	W
T_j	Maximum operating junction temperature		150	℃
T_{stg}	Storage temperature		-65~150	℃

THERMAL CHARACTERISTICS

SYMBOL	PARAMETER	VALUE	UNIT
$R_{th\ j\text{-}case}$	Thermal resistance junction to case	3.2	℃/W

INCHANGE SEMICONDUCTOR

Silicon NPN Power Transistors BUF405AFP

CHARACTERISTICS

Tj=25℃ unless otherwise specified

SYMBOL	PARAMETER	CONDITIONS	MIN	TYP.	MAX	UNIT
$V_{CEO(SUS)}$	Collector-emitter sustaining voltage	I_C=200mA ; I_B=0; L=25mH	450			V
$V_{(BR)EBO}$	Emitter-base breakdwon voltage	I_E=50mA ;I_C=0	7			V
$V_{CEsat-1}$	Collector-emitter saturation voltage	I_C=2.5A; I_B=0.25A T_C=100℃		0.8	2.8	V
$V_{CEsat-2}$	Collector-emitter saturation voltage	I_C=5A ;I_B=1A T_C=100℃		0.5	2.0	V
$V_{BEsat-1}$	Base-emitter saturation voltage	I_C=2.5A; I_B=0.25A T_C=100℃		0.9	1.5	V
$V_{BEsat-2}$	Base-emitter saturation voltage	I_C=5A ;I_B=1A T_C=100℃		1.1	1.5	V
I_{CEV}	Collector cut-off current	V_{CE}=1000V; V_{BE}=-1.5V T_C=100℃			100 500	μA
I_{EBO}	Emitter cut-off current	V_{EB}=5V; I_C=0			1	mA
Switching times inductive load						
t_s	Storage time	I_C=2.5A ;V_{CC}=50V I_{B1} =0.25A;V_{BB}=-5V ;L=1mH R_{BB}=2.4Ω;V_{clamp}=400V		0.8		μs
t_f	Fall time			0.05		μs

INCHANGE SEMICONDUCTOR

PACKAGE OUTLINE

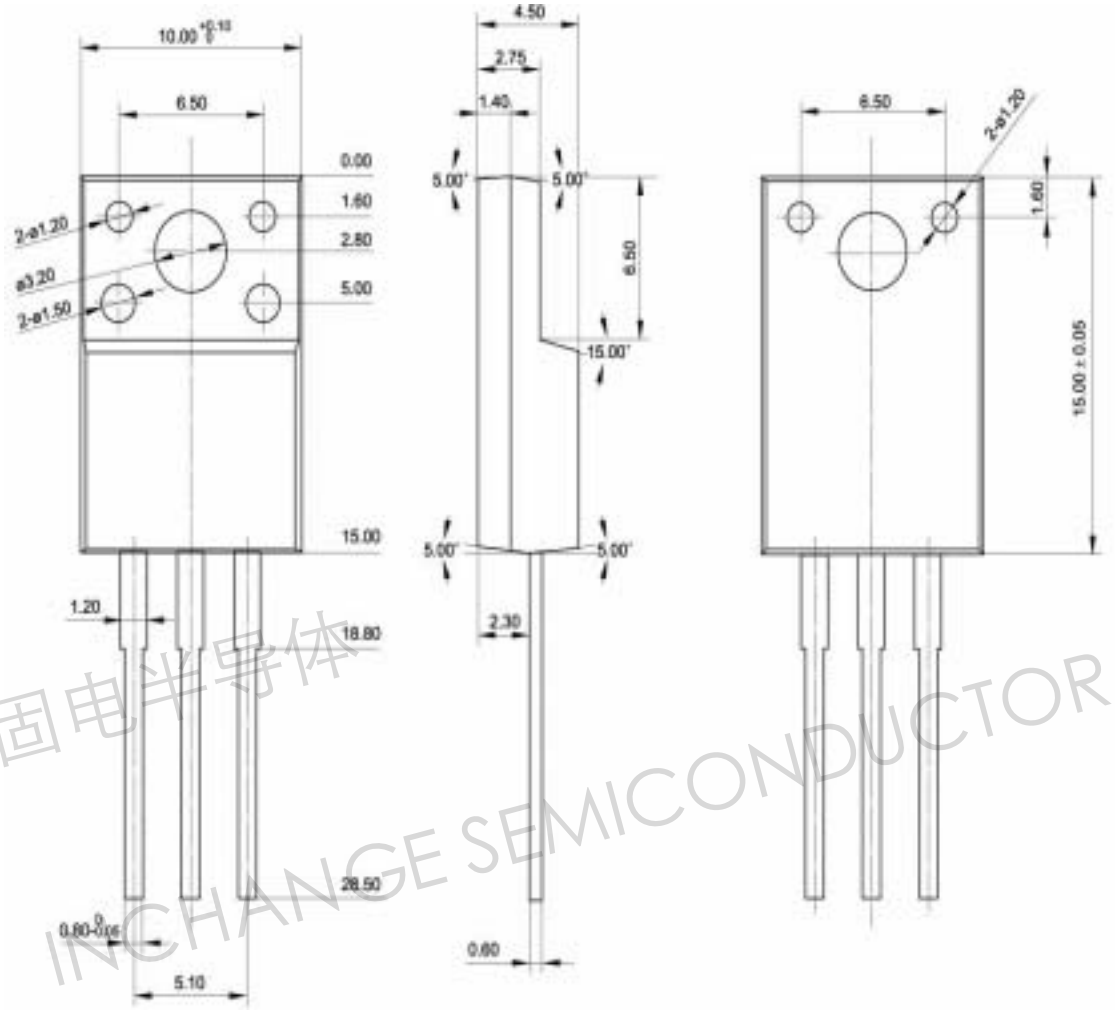

Fig.2 Outline dimensions

固电半导体
INCHANGE SEMICONDUCTOR