DATA SHEET

NEC

MOS FIELD EFFECT TRANSISTOR
2SK2541

N-CHANNEL MOS FIELD EFFECT TRANSISTOR FOR HIGH SPEED SWITCHING

DESCRIPTION

The 2SK2541 is a switching device which can be driven directly by a 1.5 V power source.

The MOS FET has excellent switching characteristics and is suitable for use as a high-speed switching device in digital circuits.

FEATURES

- Can be driven by a 1.5 V power source.
- Not necessary to consider driving current because of its high input impedance.
- Possible to reduce the number of parts by omitting the bias resistor.

ABSOLUTE MAXIMUM RATINGS (T_A = +25 °C)

Drain to Source Voltage	V_{DSS}	50	V
Gate to Source Voltage	V_{GSS}	±7.0	V
Drain Current (DC)	$I_{D(DC)}$	±0.1	A
Drain Current (pulse)	$I_{D(pulse)}$	±0.2 *	A
Total Power Dissipation	P_T	250	mW
Channel Temperature	T_{CH}	150	°C
Storage Temperature	T_{stg}	−55 to +150	°C

*PW ≦10 ms, Duty cycle ≦ 1 %

PACKAGE DRAWINGS (in millimeter)

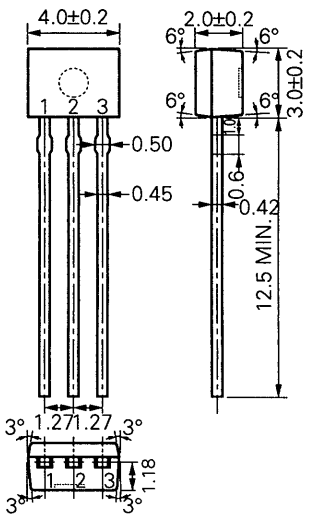

EQUIVALENT CIRCUIT

1. Source
2. Drain
3. Gate

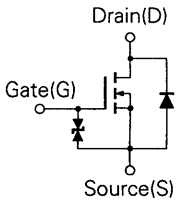

(Diode in the figure is the parasitic diode.)

The diode connected between the gate and source of the transistor serves as a protector against ESD. When this device is actually used, an additional protection circuit is externally required if a voltage exceeding the rated voltage may be applied to this device.

Document No. D10728EJ2V0DS00 (2nd edition)
(Previous No. TD-2522)
Date Published September 1995 M
Printed in Japan

© NEC Corporation 1995

ELECTRICAL CHARACTERISTICS (T_A = +25 °C)

CHARACTERISTIC	SYMBOL	MIN.	TYP.	MAX.	UNIT	TEST CONDITIONS
Drain Cut-off Current	I_{DSS}			1.0	μA	V_{DS} = 50 V, V_{GS} = 0
Gate Leakage Current	I_{GSS}			±3.0	μA	V_{GS} = ±7.0 V, V_{DS} = 0
Gate Cut-off Voltage	$V_{GS(off)}$	0.5	0.7	1.1	V	V_{DS} = 3.0 V, I_D = 1.0 μA
Forward Transfer Admittance	$\|y_{fs}\|$	20			mS	V_{DS} = 3.0 V, I_D = 10 mA
Drain to Source On-State Resistance	$R_{DS(on)1}$		32	50	Ω	V_{GS} = 1.5 V, I_D = 1 mA
Drain to Source On-State Resistance	$R_{DS(on)2}$		16	20	Ω	V_{GS} = 2.5 V, I_D = 10 mA
Drain to Source On-State Resistance	$R_{DS(on)3}$		12	15	Ω	V_{GS} = 4.0 V, I_D = 10 mA
Input Capacitance	C_{iss}		6		pF	V_{DS} = 3.0 V, V_{GS} = 0 f = 1.0 MHz
Output Capacitance	C_{oss}		8		pF	
Reverse Transfer Capacitance	C_{rss}		1		pF	
Turn-On Delay Time	$t_{d(on)}$		9		ns	V_{DD} = 3.0 V, I_D = 20 mA $V_{GS(on)}$ = 3.0 V, R_G = 10 Ω R_L = 150 Ω
Rise Time	t_r		48		ns	
Turn-Off Delay Time	$t_{d(off)}$		21		ns	
Fall Time	t_f		31		ns	

TYPICAL CHARACTERISTICS (T_A = 25 °C)

DERATING FACTOR OF FORWARD BIAS SAFE OPERATING AREA

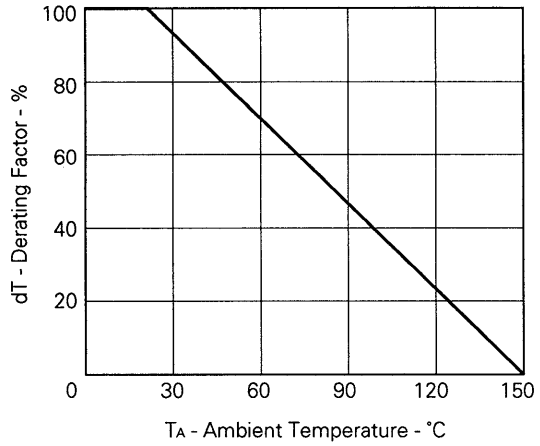

DRAIN CURRENT vs. DRAIN TO SOURCE VOLTAGE

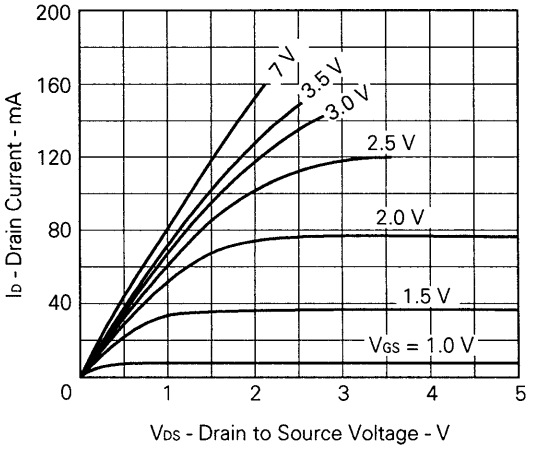

TRANSFER CHARACTERISTICS

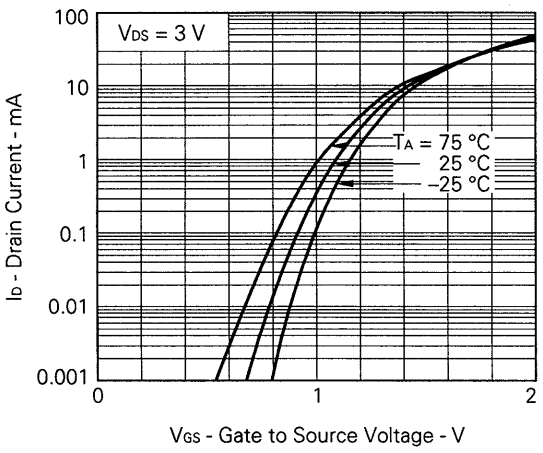

FORWARD TRANSFER ADMITTANCE vs. DRAIN CURRENT

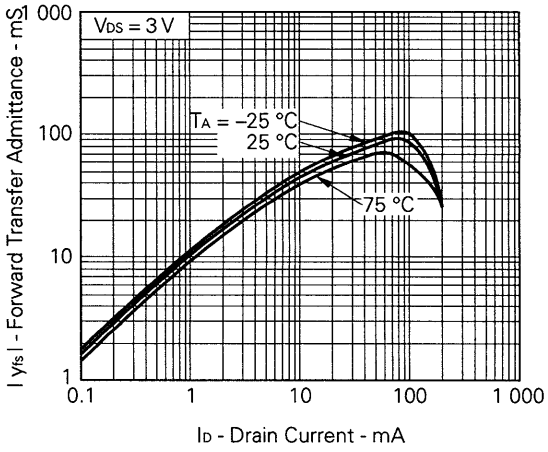

DRAIN TO SOURCE ON-STATE RESISTANCE vs. DRAIN CURRENT

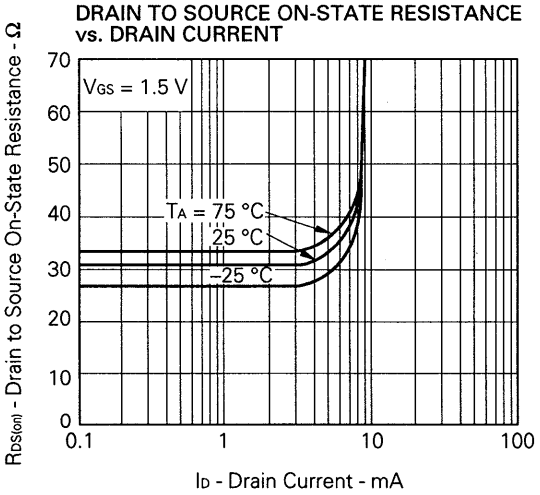

DRAIN TO SOURCE ON-STATE RESISTANCE vs. DRAIN CURRENT

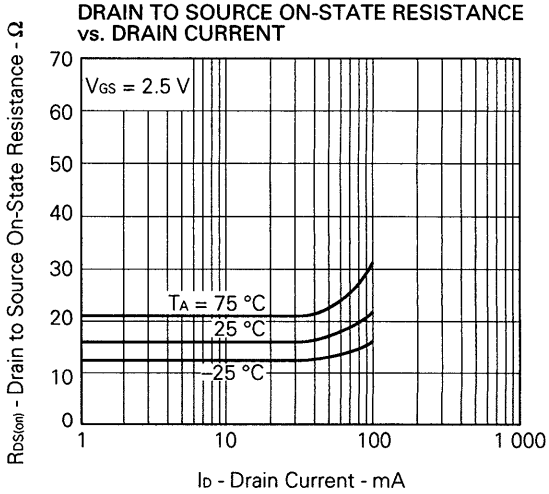

DRAIN TO SOURCE ON-STATE RESISTANCE vs. DRAIN CURRENT

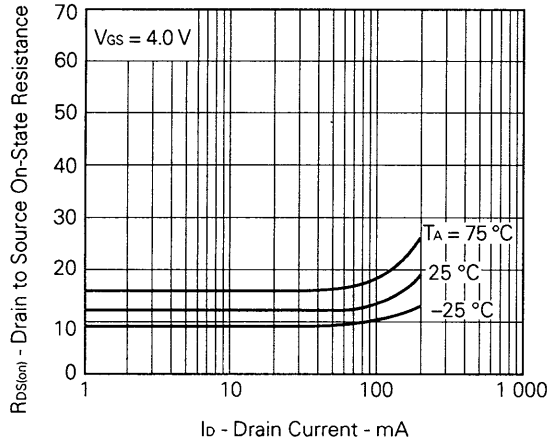

DRAIN TO SOURCE ON-STATE RESISTANCE vs. GATE TO SOURCE VOLTAGE

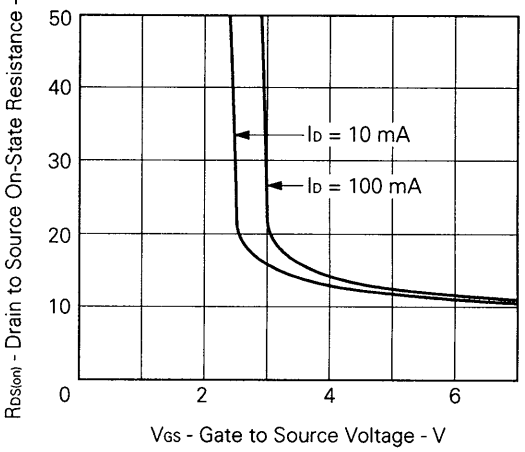

CAPACITANCE vs. DRAIN TO SOURCE VOLTAGE

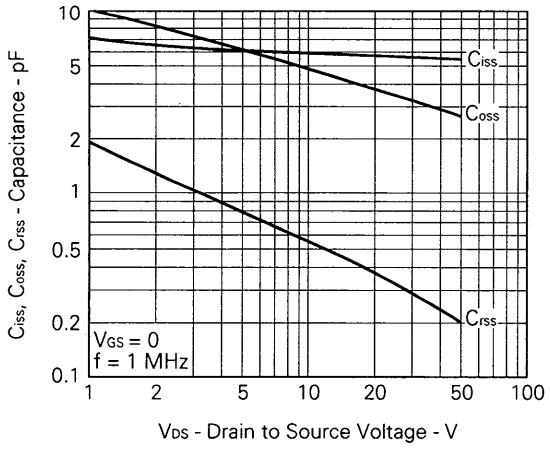

SWITCHING CHARACTERISTICS

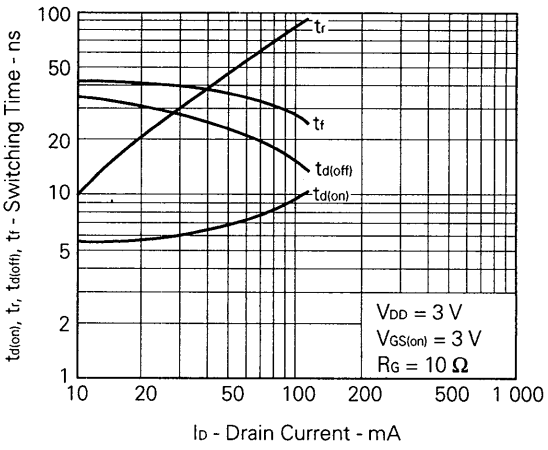

SOURCE TO DRAIN DIODE FORWARD VOLTAGE

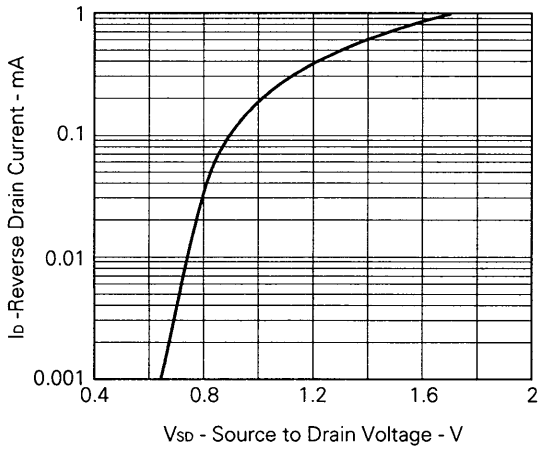

REFERENCE

Document Name	Document No.
NEC semiconductor device reliability/quality control system	TEI-1202
Quality grade on NEC semiconductor devices	IEI-1209
Semiconductor device mounting technology manual	IEI-1207
Guide to quality assurance for semiconductor devices	MEI-1202
Semiconductor selection guide	MF-1134

[MEMO]

No part of this document may be copied or reproduced in any form or by any means without the prior written consent of NEC Corporation. NEC Corporation assumes no responsibility for any errors which may appear in this document.
NEC Corporation does not assume any liability for infringement of patents, copyrights or other intellectual property rights of third parties by or arising from use of a device described herein or any other liability arising from use of such device. No license, either express, implied or otherwise, is granted under any patents, copyrights or other intellectual property rights of NEC Corporation or others.
While NEC Corporation has been making continuous effort to enhance the reliability of its semiconductor devices, the possibility of defects cannot be eliminated entirely. To minimize risks of damage or injury to persons or property arising from a defect in an NEC semiconductor device, customer must incorporate sufficient safety measures in its design, such as redundancy, fire-containment, and anti-failure features.
NEC devices are classified into the following three quality grades:
"Standard", "Special", and "Specific". The Specific quality grade applies only to devices developed based on a customer designated "quality assurance program" for a specific application. The recommended applications of a device depend on its quality grade, as indicated below. Customers must check the quality grade of each device before using it in a particular application.

Standard: Computers, office equipment, communications equipment, test and measurement equipment, audio and visual equipment, home electronic appliances, machine tools, personal electronic equipment and industrial robots

Special: Transportation equipment (automobiles, trains, ships, etc.), traffic control systems, anti-disaster systems, anti-crime systems, safety equipment and medical equipment (not specifically designed for life support)

Specific: Aircrafts, aerospace equipment, submersible repeaters, nuclear reactor control systems, life support systems or medical equipment for life support, etc.

The quality grade of NEC devices in "Standard" unless otherwise specified in NEC's Data Sheets or Data Books. If customers intend to use NEC devices for applications other than those specified for Standard quality grade, they should contact NEC Sales Representative in advance.
Anti-radioactive design is not implemented in this product.

M4 94.11