SPECIFICATION

DEVICE NAME : Power MOSFET .

TYPE NAME : 2SJ476-01L,S .

SPEC. NO. : .

Fuji Electric Co.,Ltd.

This Specification is subject to change without notice.

	DATE	NAME	APPROVED
DRAWN			
CHECKED			

Fuji Electric Co.,Ltd.

DWG. NO.

1.Scope This specifies Fuji Power MOSFET 2SJ476-01L,S

2.Construction P-Channel enhancement mode power MOSFET

3.Applications for Switching

4.Outview T-Pack L-Type : Outview See to 5/13 page
S-Type : Outview See to 6/13 page

5.Absolute Maximum Ratings at Tc=25℃ (unless otherwise specified)

Description	Symbol	Characteristics	Unit	Remarks
Drain-Source Voltage	V_{DS}	−60	V	
Continuous Drain Current	I_D	±25	A	
Pulsed Drain Current	I_{DP}	±100	A	
Gate-Source Voltage	V_{GS}	±20	V	
Maximum Avalanche Energy	E_{AV}	325.9	mJ	*1
Maximum Power Dissipation	P_D	50	W	
Operating and Storage	T_{ch}	150	℃	
Temperature range	T_{stg}	-55 to +150	℃	

*1 L=0.695mH,Vcc=-24V

6.Electrical Characteristics at Tc=25℃ (unless otherwise specified)

Static Ratings

Description	Symbol	Conditions		min.	typ.	max.	Unit
Drain-Source Breakdown Voltage	BV_{DSS}	I_D=-1mA V_{GS}=0V		-60			V
Gate Threshold Voltage	$V_{GS(th)}$	I_D=-1mA V_{DS}=V_{GS}		-1.0	-1.5	-2.5	V
Zero Gate Voltage Drain Current	I_{DSS}	V_{DS}=-60V V_{GS}=0V	T_{ch}=25℃		-10	-500	μA
			T_{ch}=125℃		-0.2	-1.0	mA
Gate-Source Leakage Current	I_{GSS}	V_{GS}=±20V V_{DS}=0V			10	100	nA
Drain-Source On-State Resistance	$R_{DS(on)}$	I_D=-12.5A	V_{GS}=-4V		80	110	mΩ
			V_{GS}=-10V		45	60	

Dynamic Ratings

Description	Symbol	Conditions	min.	typ.	max.	Unit
Forward Transconductance	g_{fs}	I_D=-12.5A V_{DS}=-25V	7.5	15.0		S
Input Capacitance	Ciss	V_{DS}=-25V		2000	3000	pF
Output Capacitance	Coss	V_{GS}=0V		700	1050	
Reverse Transfer Capacitance	Crss	f=1MHz		450	680	
Turn-On Time	td(on)	V_{cc}=-30V		15	25	ns
	tr	V_{GS}=-10V		80	120	
Turn-Off Time	td(off)	I_D=-25A		190	290	
	tf	R_{GS}=10Ω		90	140	

Reverse Diode

Description	Symbol	Conditions	min.	typ.	max.	Unit
Avalanche Capability	I_{AV}	L=100μH Tch=25℃ See Fig.1 and Fig.2	-25			A
Diode Forward On-Voltage	V_{SD}	I_F=2×I_{DR} V_{GS}=0V T_{ch}=25℃		-2	-3	V
Reverse Recovery Time	trr	I_F=I_{DR}		160		ns
Reverse Recovery Charge	Qrr	di/dt=100A/μs T_{ch}=25℃		0.9		μc

7.Thermal Resistance

Description	Symbol	min.	typ.	max.	Unit
Channel to Case	Rth(ch-c)			2.50	℃/W
Channel to Ambient	Rth(ch-a)			75	℃/W

Fig.1 Test circuit

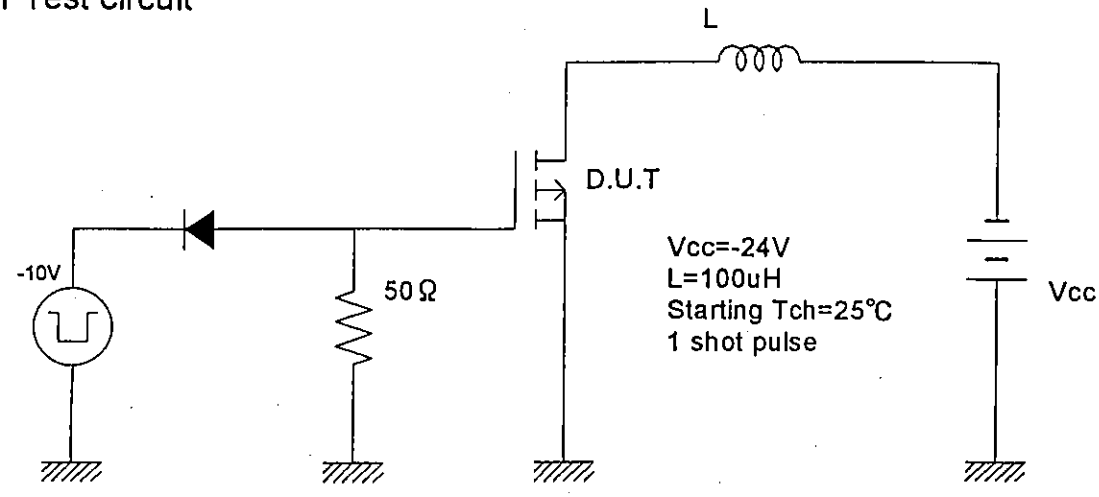

Fig.2 Operating waveforms

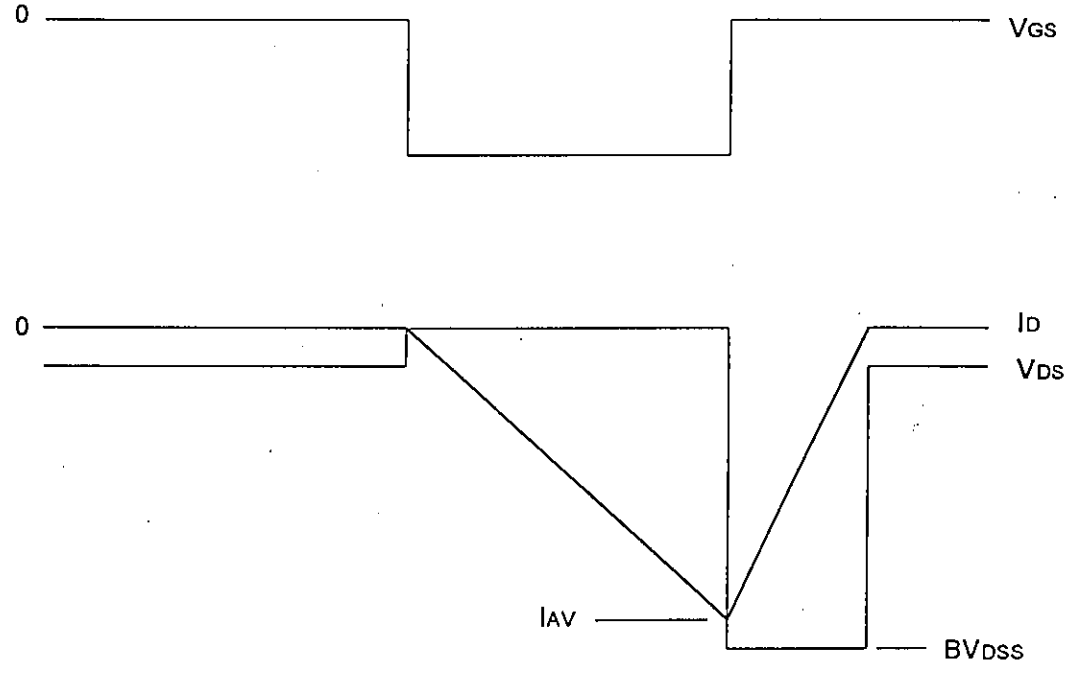

FUJI POWER MOS FET

TYPE : 2SJ476-01L

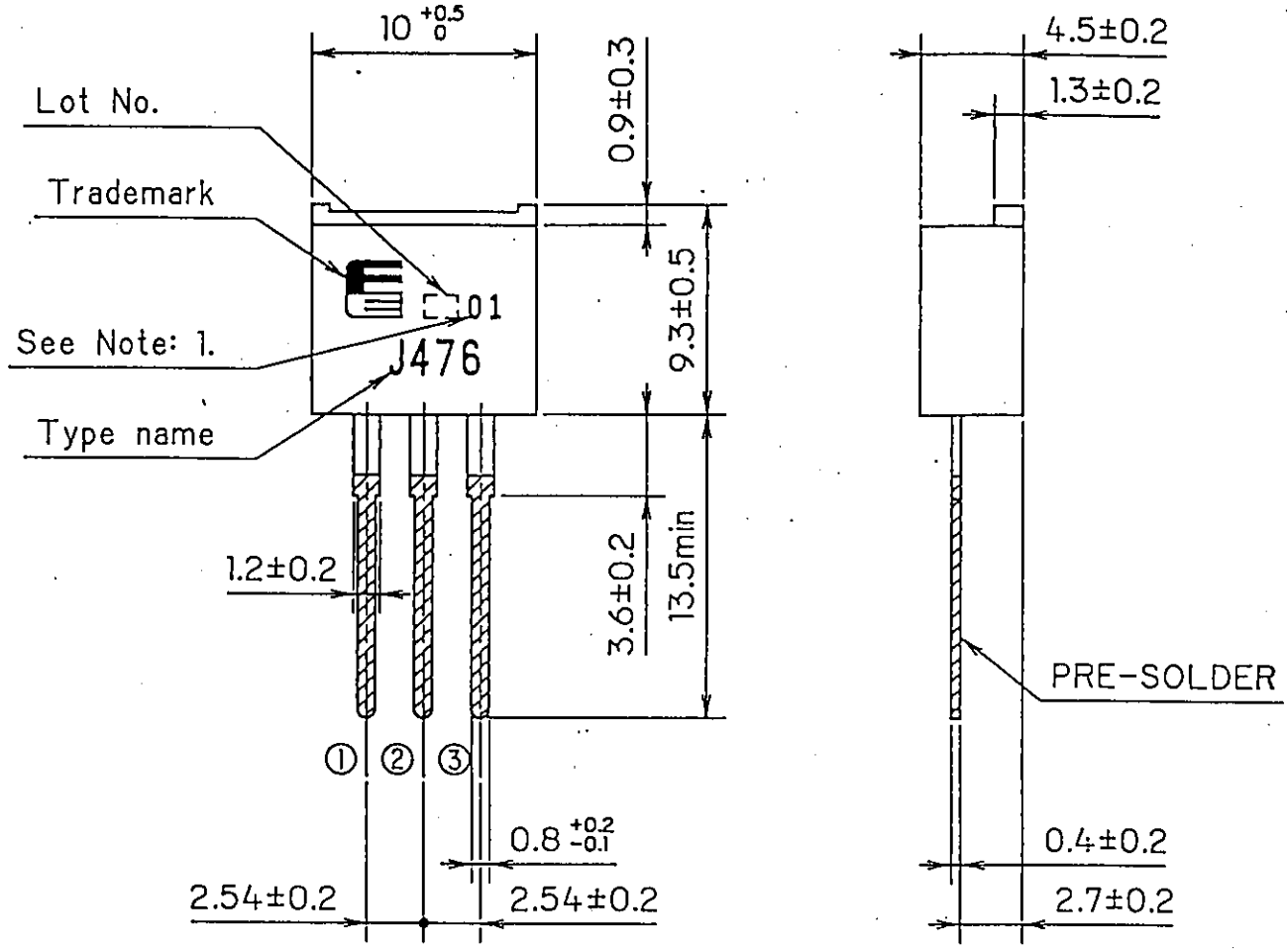

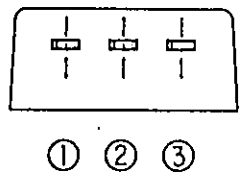

CONNECTION

① GATE
② DRAIN
③ SOURCE

Note: 1. Guaranteed mark of avalanche ruggedness.

DIMENSIONS ARE IN MILLIMETERS.

FUJI POWER MOS FET

TYPE : 2SJ476-01S

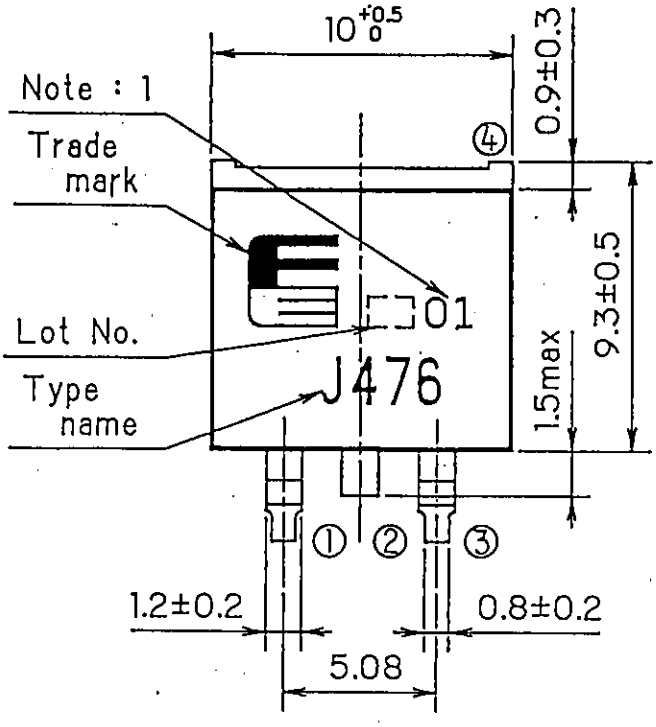

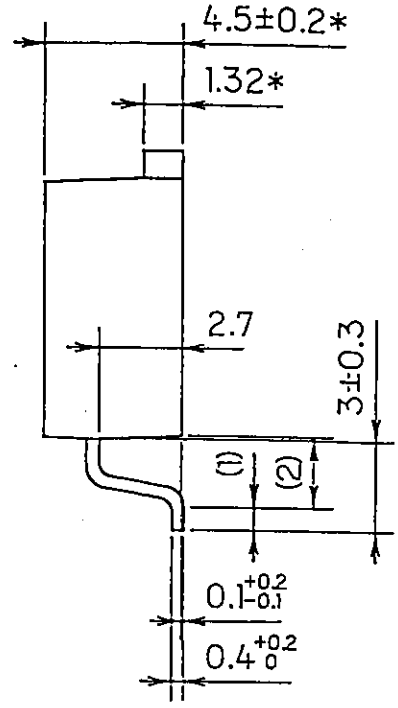

BOTTOM VIEW

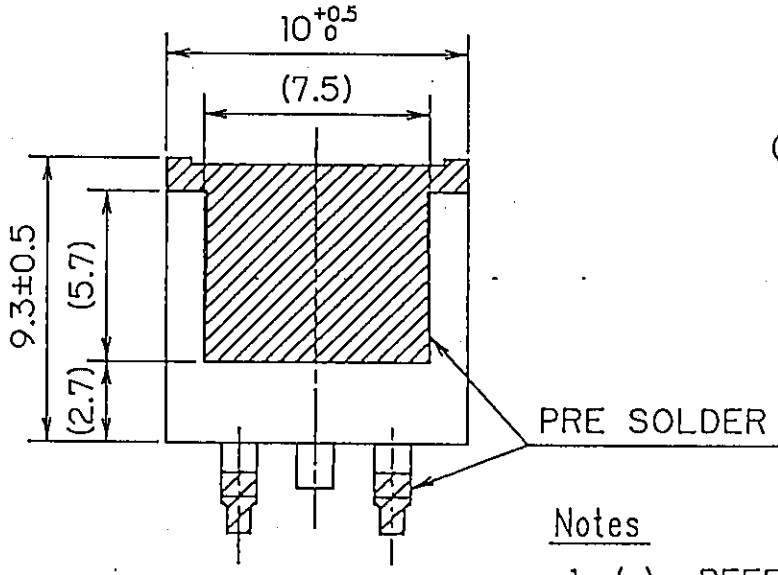

CONNECTION

① GATE
④ ② DRAIN
③ SOURCE

Note 1. Guaranteed mark of avalanche ruggedness.

Notes

1. ( ) : REFERENCE DIMENSIONS.
2. * : DO NOT INCLUDE SOLDER.

DIMENSIONS ARE IN MILLIMETERS.

Power Dissipation
PD=f(Tc)

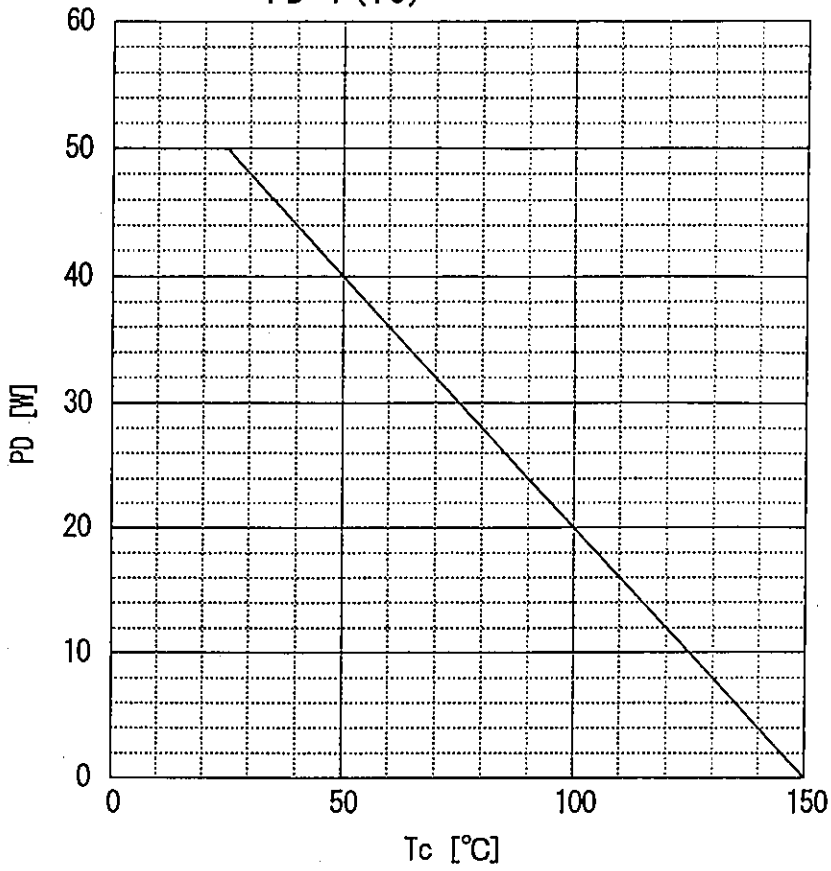

Safe operating area
ID=f(VDS) : D=0.01, Tc=25°C

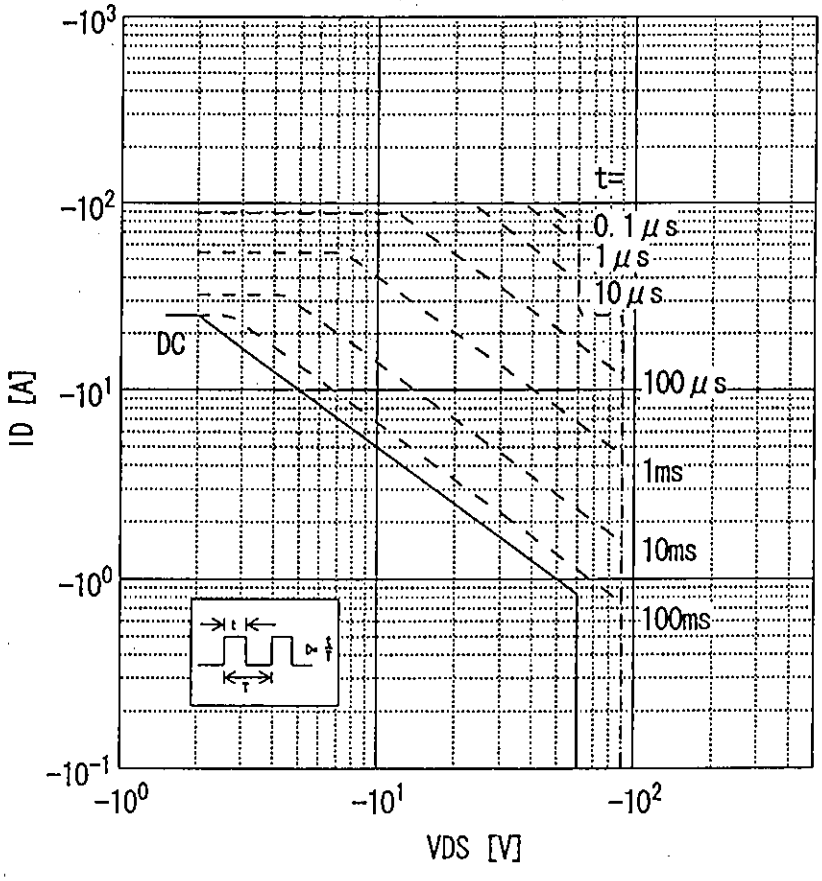

Typical output characteristics

ID=f(VDS):80μs pulse test, Tc=25℃

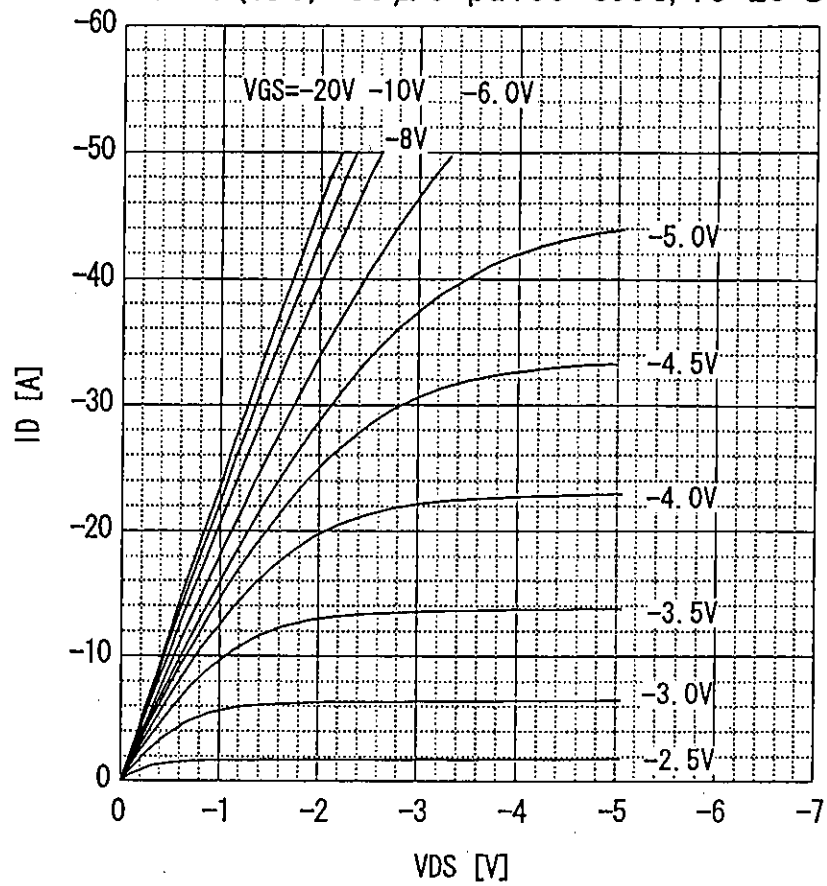

Typical transfer characteristic

ID=f(VGS):80μs pulse test, VDS=-25V, Tch=25℃

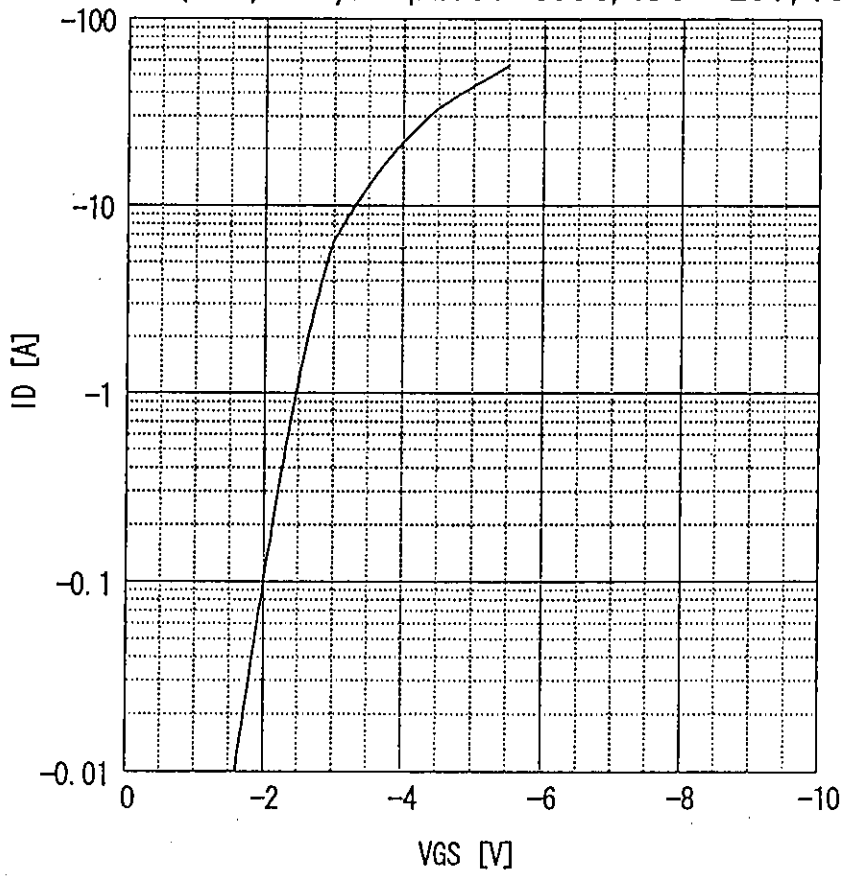

Typical forward transconductance
gfs=f(ID):80μs pulse test, VDS=−25V, Tch=25℃

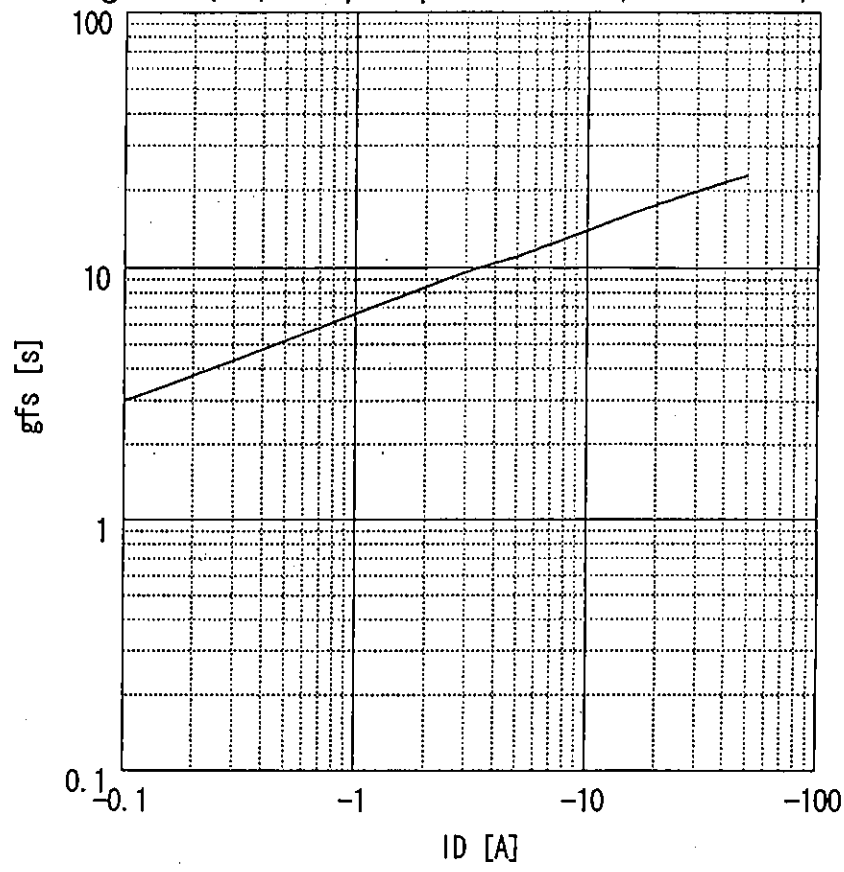

Typical drain-source on-state resistance
RDS(on)=f(ID):80μs pulse test, Tc=25℃

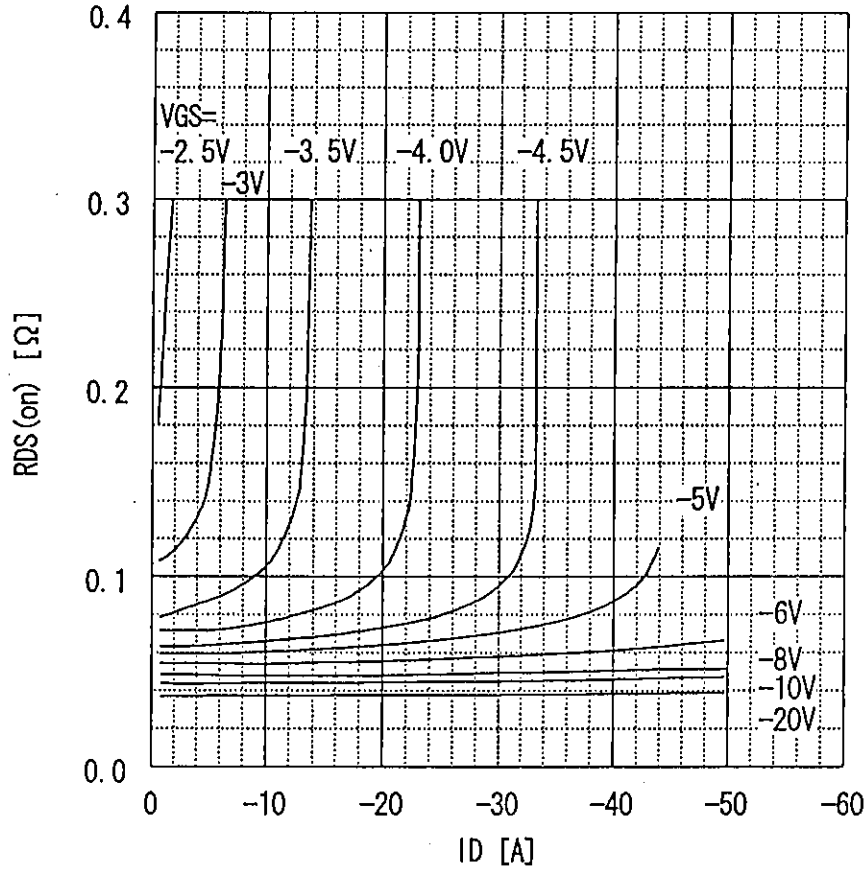

Drain-source on-state resistance
RDS(on)=f(Tch) : ID=-12.5A, VGS=10V

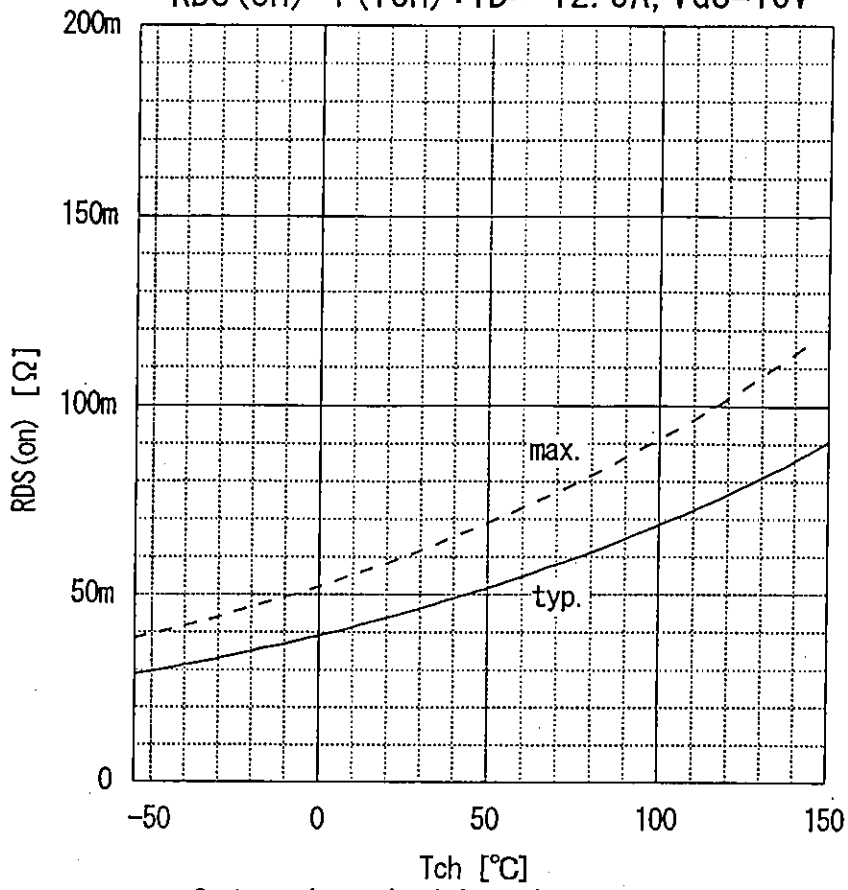

Gate threshold voltage
VGS(th)=f(Tch) : ID=-1mA, VDS=VGS

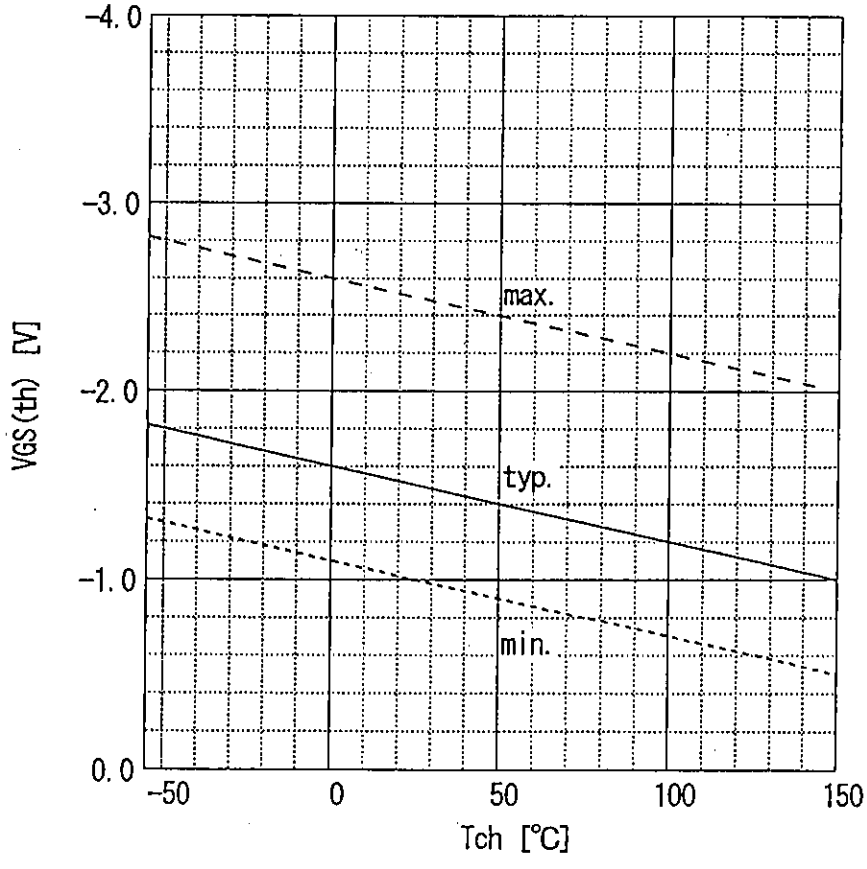

Typical gate charge characteristic
VGS=f(Qg) : ID=-25A, Tc=25℃

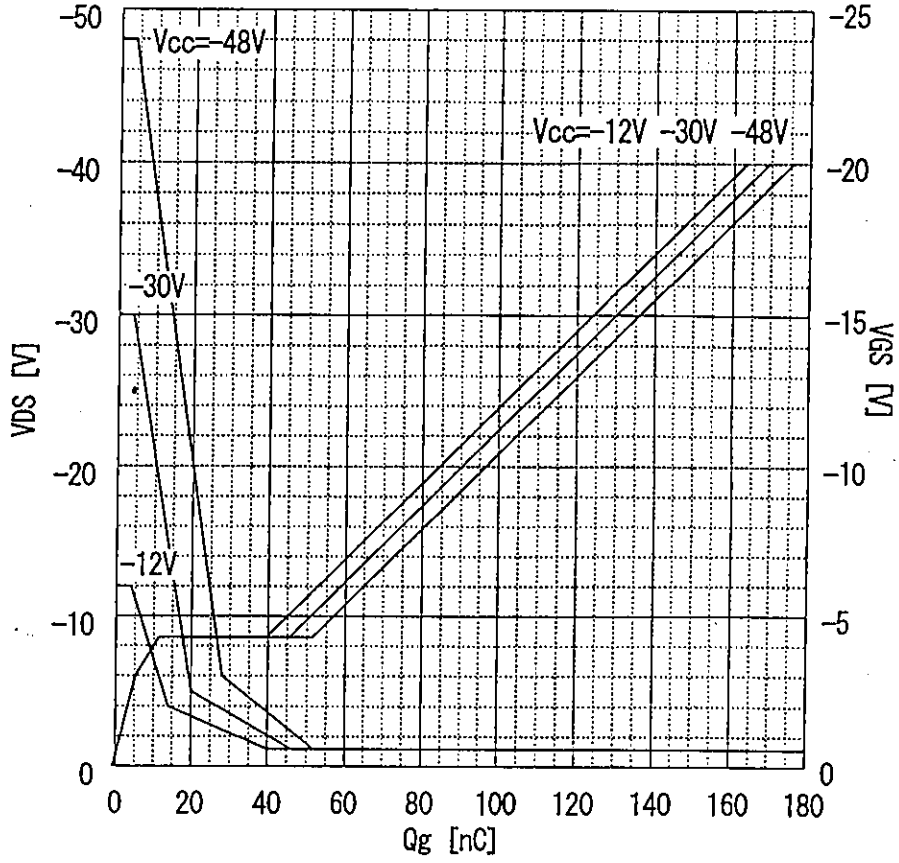

Typical capacitances
C=f(VDS) : VGS=0V, f=1MHz

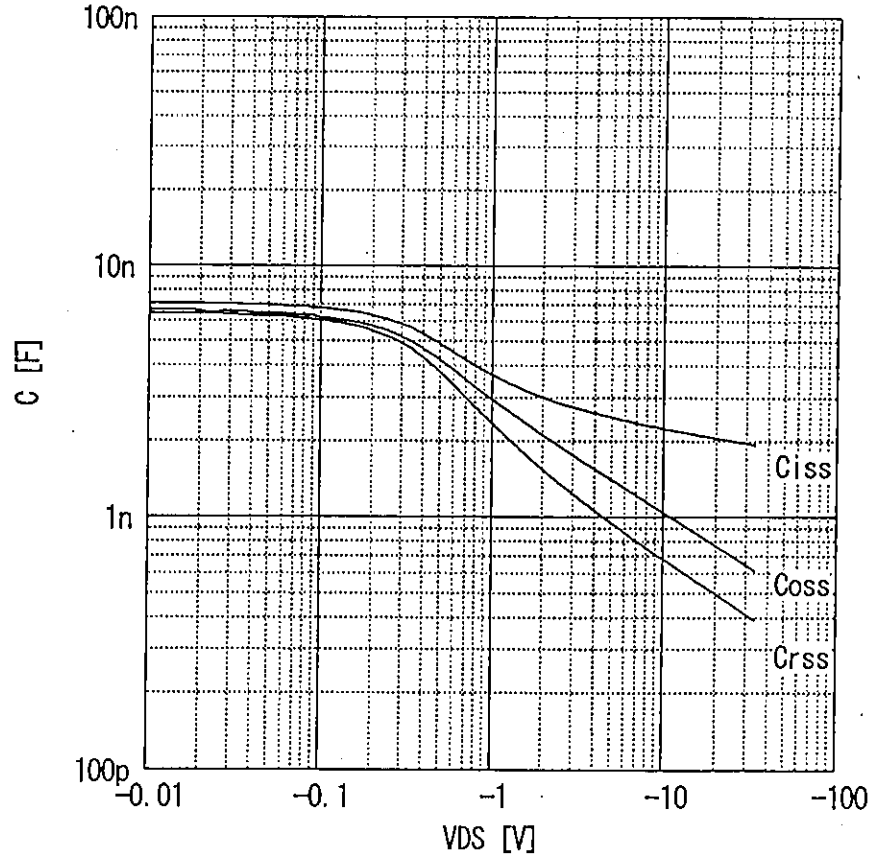

Maximum Avalanche Current vs. starting Tch

I(AV)=f(starting Tch)

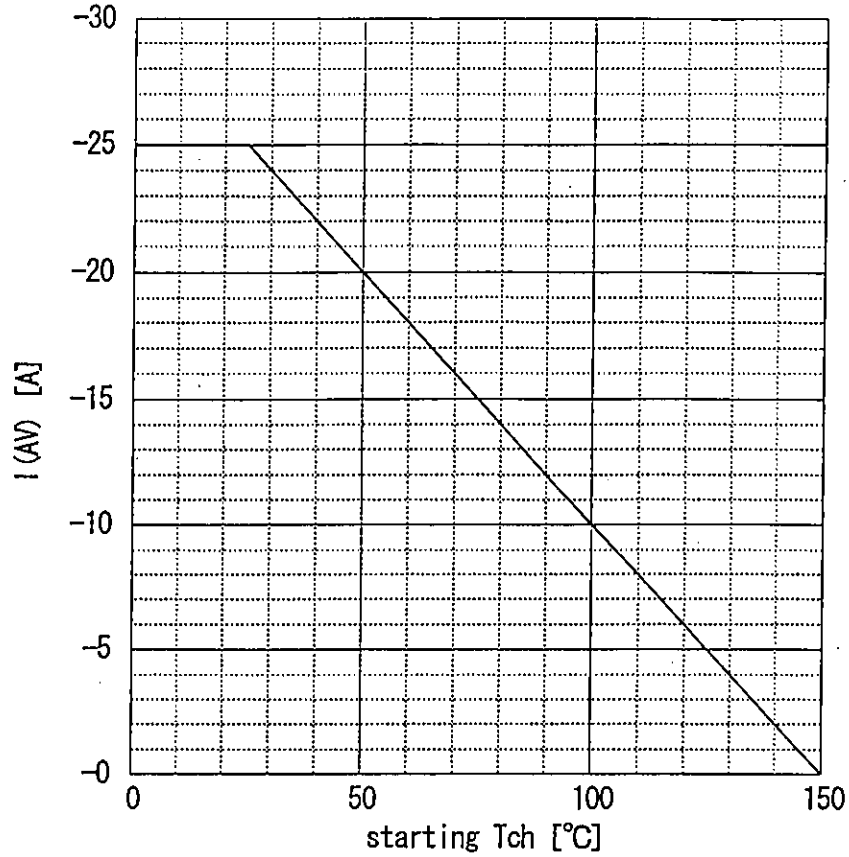

Maximum Avalanche Energy vs. starting Tch

E(AV)=f(starting Tch):Vcc=-24V, I(AV)≧-25A

