isc N-Channel MOSFET Transistor 2SK2056

DESCRIPTION

- Drain Current $-I_D$= 4A@ T_C=25℃
- Drain Source Voltage-
  : V_{DSS}= 800V(Min)
- Fast Switching Speed

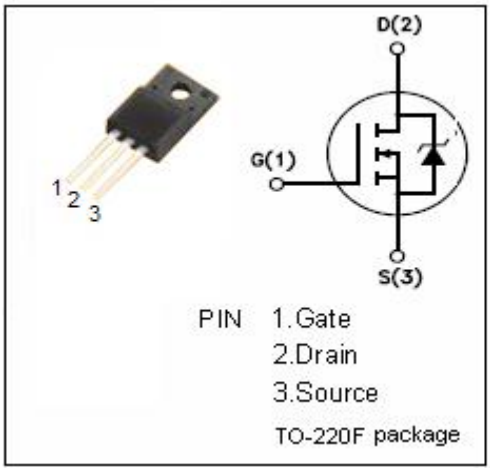

APPLICATIONS

- Switching regulators
- General purpose power amplifier

ABSOLUTE MAXIMUM RATINGS(T_a=25℃)

SYMBOL	ARAMETER	VALUE	UNIT
V_{DSS}	Drain-Source Voltage (V_{GS}=0)	800	V
V_{GS}	Gate-Source Voltage	±30	V
I_D	Drain Current-continuous@ TC=25℃	4	A
$I_{D(puls)}$	Pulsed Drain Current	16	A
P_{tot}	Total Dissipation@TC=25℃	40	W
T_j	Max. Operating Junction Temperature	150	℃
T_{stg}	Storage Temperature Range	-55~150	℃

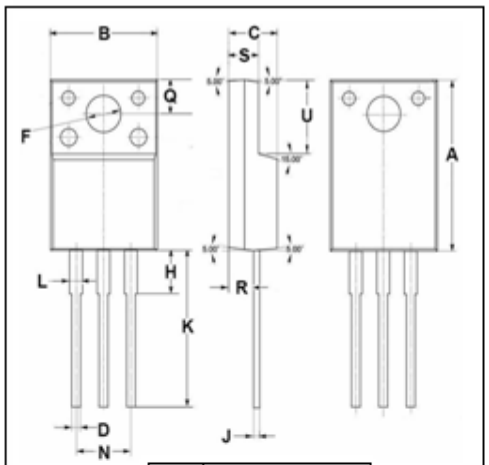

DIM	mm MIN	MAX
A	14.95	15.05
B	10.00	10.10
C	4.40	4.60
D	0.75	0.80
F	3.10	3.30
H	3.70	3.90
J	0.50	0.70
K	13.4	13.6
L	1.10	1.30
N	5.00	5.20
Q	2.70	2.90
R	2.20	2.40
S	2.65	2.85
U	6.40	6.60

PDF pdfFactory Pro www.fineprint.cn

isc N-Channel Mosfet Transistor 2SK2056

• **ELECTRICAL CHARACTERISTICS (T_C=25℃)**

SYMBOL	PARAMETER	CONDITIONS	MIN	TYPE	MAX	UNIT
$V_{(BR)DSS}$	Drain-Source Breakdown Voltage	V_{GS}= 0; I_D= 1mA	800			V
$V_{GS(th)}$	Gate Threshold Voltage	V_{DS}= V_{GS}; I_D=1mA	1.5		3.5	V
$R_{DS(on)}$	Drain-Source On-Resistance	V_{GS}= 10V; I_D= 2A		1.0	1.2	Ω
I_{GSS}	Gate-Body Leakage Current	V_{GS}= ±30V;V_{DS}= 0			±100	nA
I_{DSS}	Zero Gate Voltage Drain Current	V_{DS}= 800V; V_{GS}= 0			500	μA

PDF pdfFactory Pro www.fineprint.cn