ALPHA & OMEGA SEMICONDUCTOR

AO4433

30V P-Channel MOSFET

General Description

The AO4433 uses advanced trench technology to provide excellent $R_{DS(ON)}$ and ultra-low low gate charge with a 25V gate rating. This device is suitable for use as a load switch or in PWM applications.

Product Summary

V_{DS} (V) = -30V
I_D = -11 A (V_{GS} = -20V)
$R_{DS(ON)}$ < 14mΩ (V_{GS} = -20V)
$R_{DS(ON)}$ < 18mΩ (V_{GS} = -10V)
$R_{DS(ON)}$ < 36mΩ (V_{GS}= -5V)

ESD Protected
100% UIS Tested
100% Rg Tested

Green Product

SOIC-8

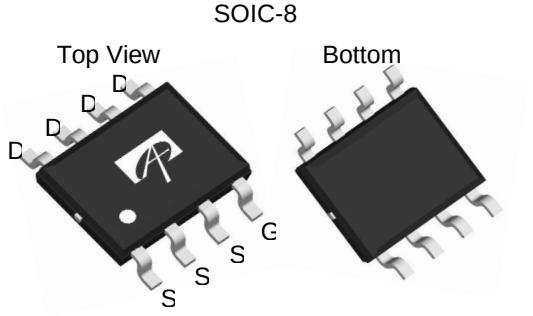

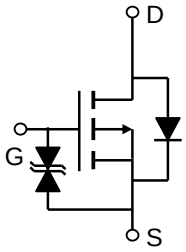

Absolute Maximum Ratings T_A=25°C unless otherwise noted

Parameter		Symbol	Maximum	Units
Drain-Source Voltage		V_{DS}	-30	V
Gate-Source Voltage		V_{GS}	±25	V
Continuous Drain Current [AF]	T_A=25°C	I_D	-11	A
	T_A=70°C		-9.7	
Pulsed Drain Current [B]		I_{DM}	-50	
Power Dissipation [A]	T_A=25°C	P_D	3	W
	T_A=70°C		2.1	
Avalanche Current [B]		I_{AR}	-36	A
Repetitive avalanche energy 0.1mH [B]		E_{AR}	65	mJ
Junction and Storage Temperature Range		T_J, T_{STG}	-55 to 150	°C

Thermal Characteristics

Parameter		Symbol	Typ	Max	Units
Maximum Junction-to-Ambient [AF]	t ≤ 10s	$R_{\theta JA}$	28	40	°C/W
Maximum Junction-to-Ambient [A]	Steady-State		54	75	°C/W
Maximum Junction-to-Lead [C]	Steady-State	$R_{\theta JL}$	21	30	°C/W

Electrical Characteristics (T_J=25°C unless otherwise noted)

Symbol	Parameter	Conditions	Min	Typ	Max	Units
STATIC PARAMETERS						
BV_{DSS}	Drain-Source Breakdown Voltage	I_D=-250µA, V_{GS}=0V	-30			V
I_{DSS}	Zero Gate Voltage Drain Current	V_{DS}=-30V, V_{GS}=0V			-1	µA
		T_J=55°C			-5	
I_{GSS}	Gate-Body leakage current	V_{DS}=0V, V_{GS}=±25V			±10	µA
$V_{GS(th)}$	Gate Threshold Voltage	V_{DS}=V_{GS} I_D=-250µA	-1.5	-2.45	-3.5	V
$I_{D(ON)}$	On state drain current	V_{GS}=-10V, V_{DS}=-5V	-50			A
$R_{DS(ON)}$	Static Drain-Source On-Resistance	V_{GS}=-20V, I_D=-11A		11	14	mΩ
		T_J=125°C		15	19	
		V_{GS}=-10V, I_D=-10A		13.8	18	mΩ
		V_{GS}=-5V, I_D=-5A		25.8	36	mΩ
g_{FS}	Forward Transconductance	V_{DS}=-5V, I_D=-11A		20		S
V_{SD}	Diode Forward Voltage	I_S=-1A,V_{GS}=0V		-0.72	-1	V
I_S	Maximum Body-Diode Continuous Current				-4.2	A
DYNAMIC PARAMETERS						
C_{iss}	Input Capacitance	V_{GS}=0V, V_{DS}=-15V, f=1MHz		1760	2200	pF
C_{oss}	Output Capacitance			360		pF
C_{rss}	Reverse Transfer Capacitance			255	357	pF
R_g	Gate resistance	V_{GS}=0V, V_{DS}=0V, f=1MHz	3.2	6.4	8	Ω
SWITCHING PARAMETERS						
Q_g	Total Gate Charge	V_{GS}=-10V, V_{DS}=-15V, I_D=-11A		30	38	nC
Q_{gs}	Gate Source Charge			7		nC
Q_{gd}	Gate Drain Charge			8		nC
$t_{D(on)}$	Turn-On DelayTime	V_{GS}=-10V, V_{DS}=-15V, R_L=1.5Ω, R_{GEN}=3Ω		11.5		ns
t_r	Turn-On Rise Time			8		ns
$t_{D(off)}$	Turn-Off DelayTime			35		ns
t_f	Turn-Off Fall Time			18.5		ns
t_{rr}	Body Diode Reverse Recovery Time	I_F=-11A, dI/dt=100A/µs		24	30	ns
Q_{rr}	Body Diode Reverse Recovery Charge	I_F=-11A, dI/dt=100A/µs		16		nC

A: The value of $R_{\theta JA}$ is measured with the device mounted on 1in 2 FR-4 board with 2oz. Copper, in a still air environment with T_A=25°C. The value in any given application depends on the user's specific board design.

B: Repetitive rating, pulse width limited by junction temperature.

C. The $R_{\theta JA}$ is the sum of the thermal impedence from junction to lead $R_{\theta JL}$ and lead to ambient.

D. The static characteristics in Figures 1 to 6 are obtained using <300 µs pulses, duty cycle 0.5% max.

E. These tests are performed with the device mounted on 1 in 2 FR-4 board with 2oz. Copper, in a still air environment with T_A=25°C. The SOA curve provides a single pulse rating.

F. The current rating is based on the t≤ 10s junction to ambient thermal resistance rating.

Rev9: Nov. 2010

THIS PRODUCT HAS BEEN DESIGNED AND QUALIFIED FOR THE CONSUMER MARKET. APPLICATIONS OR USES AS CRITICAL COMPONENTS IN LIFE SUPPORT DEVICES OR SYSTEMS ARE NOT AUTHORIZED. AOS DOES NOT ASSUME ANY LIABILITY ARISING OUT OF SUCH APPLICATIONS OR USES OF ITS PRODUCTS. AOS RESERVES THE RIGHT TO IMPROVE PRODUCT DESIGN, FUNCTIONS AND RELIABILITY WITHOUT NOTICE.

TYPICAL ELECTRICAL AND THERMAL CHARACTERISTICS

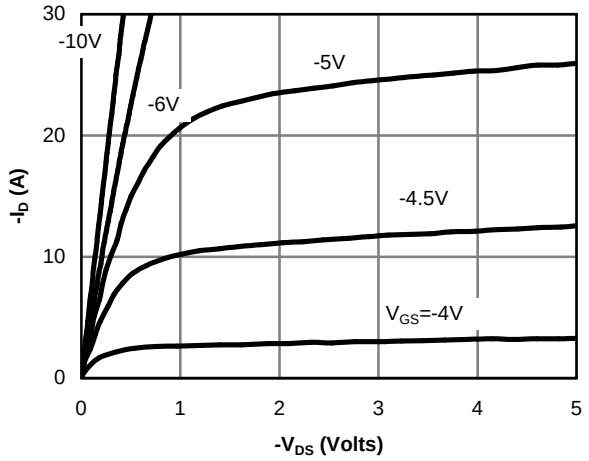

Fig 1: On-Region Characteristics

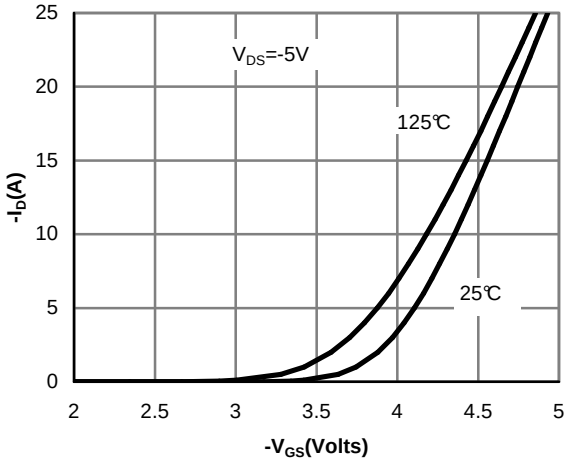

Figure 2: Transfer Characteristics

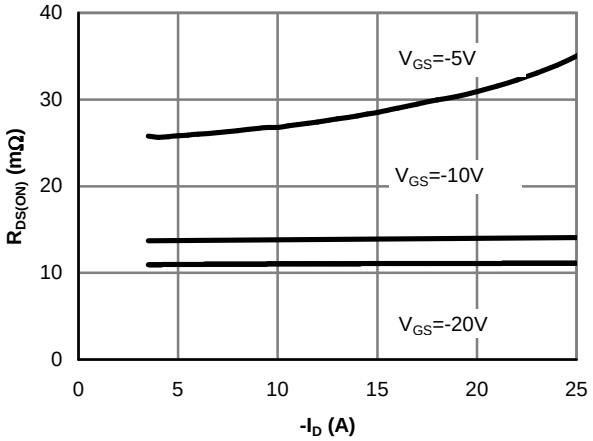

Figure 3: On-Resistance vs. Drain Current and Gate Voltage

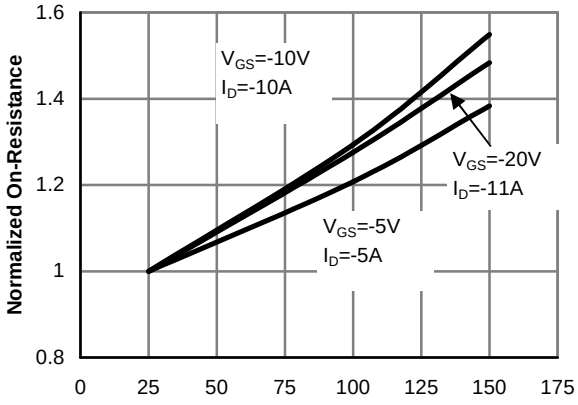

Figure 4: On-Resistance vs. Junction Temperature

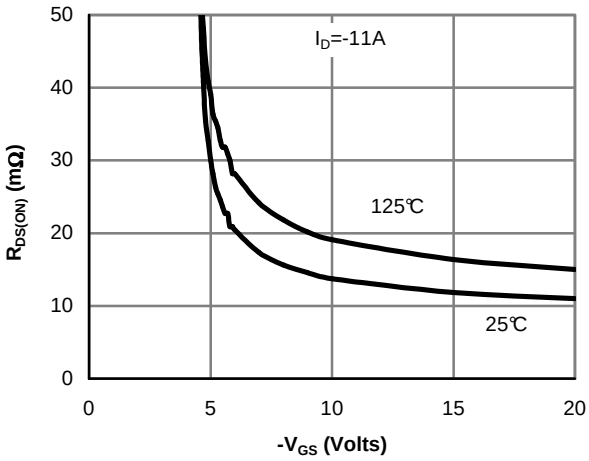

Figure 5: On-Resistance vs. Gate-Source Voltage

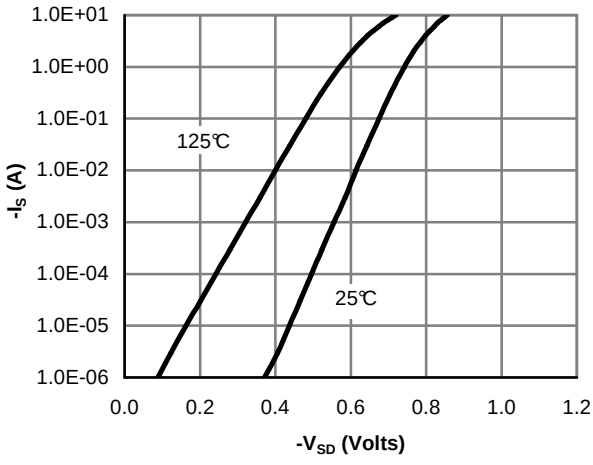

Figure 6: Body-Diode Characteristics

TYPICAL ELECTRICAL AND THERMAL CHARACTERISTICS

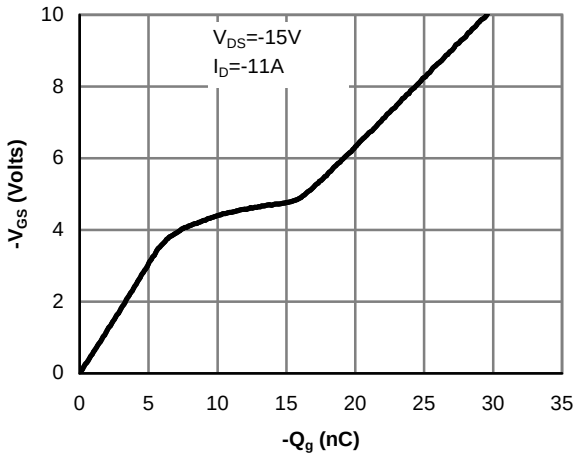

Figure 7: Gate-Charge Characteristics

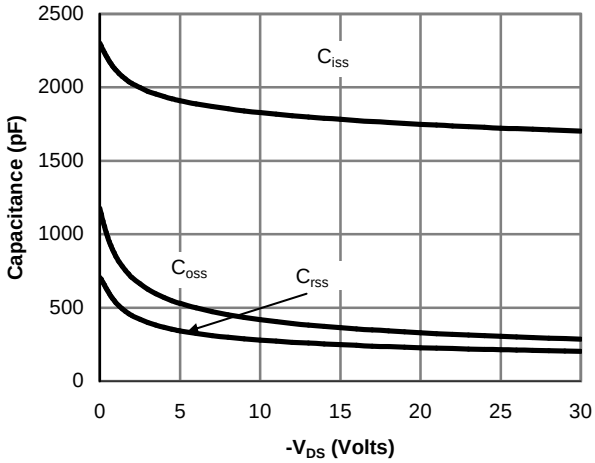

Figure 8: Capacitance Characteristics

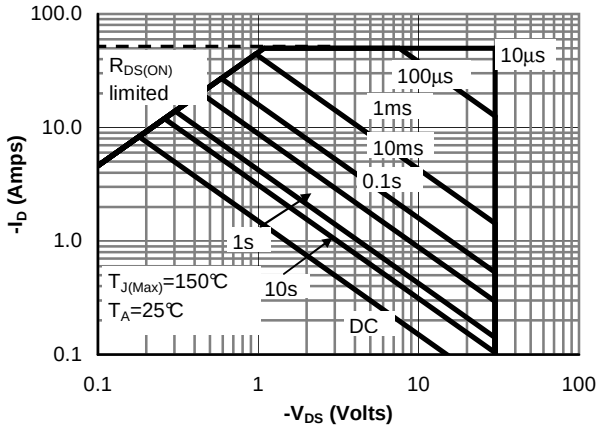

Figure 9: Maximum Forward Biased Safe Operating Area (Note E)

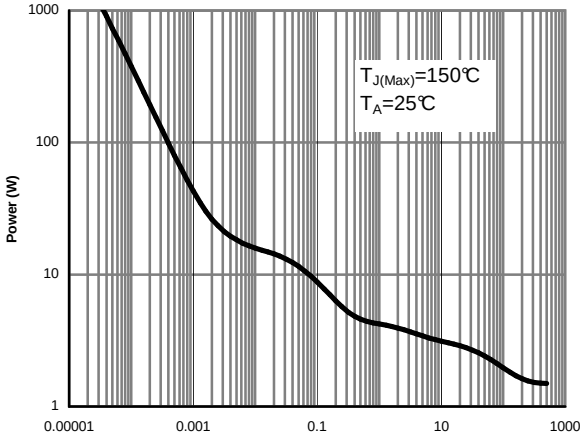

Figure 10: Single Pulse Power Rating Junction-to-Ambient (Note E)

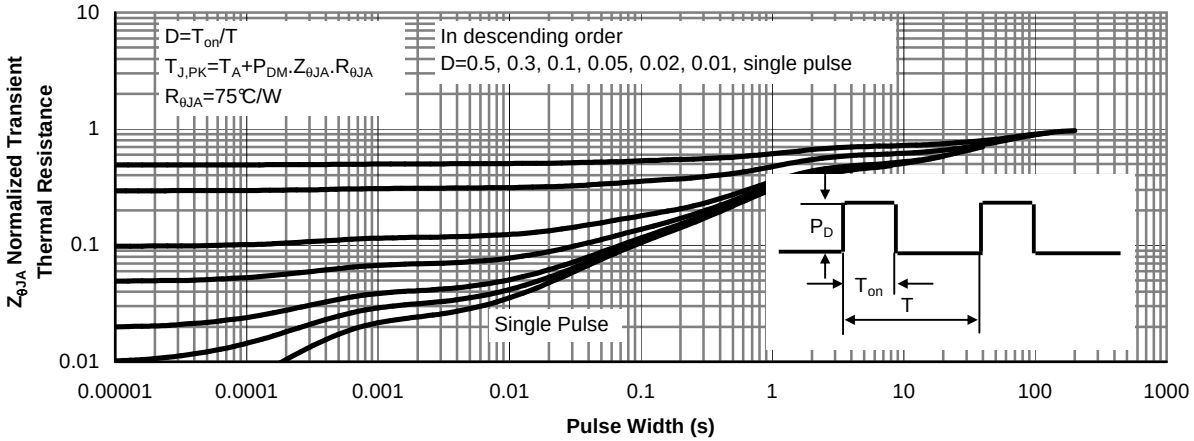

Figure 11: Normalized Maximum Transient Thermal Impedance

Gate Charge Test Circuit & Waveform

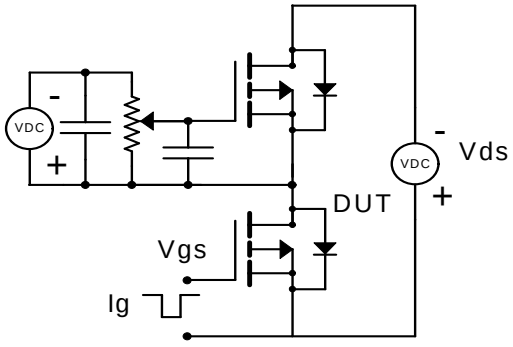

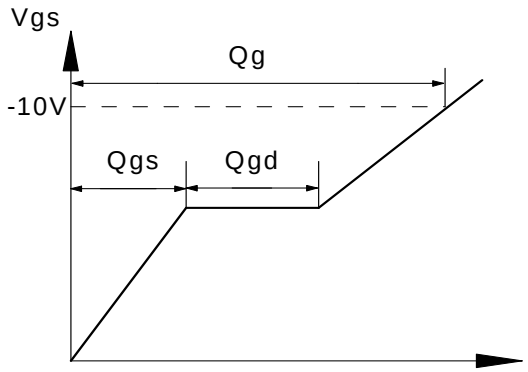

Resistive Switching Test Circuit & Waveforms

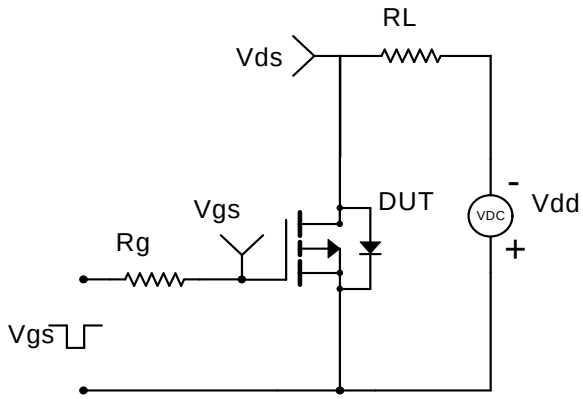

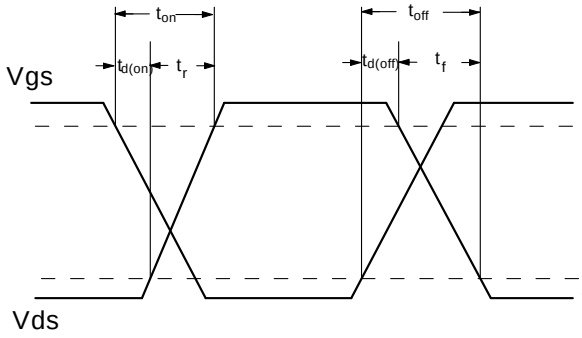

Unclamped Inductive Switching (UIS) Test Circuit & Waveforms

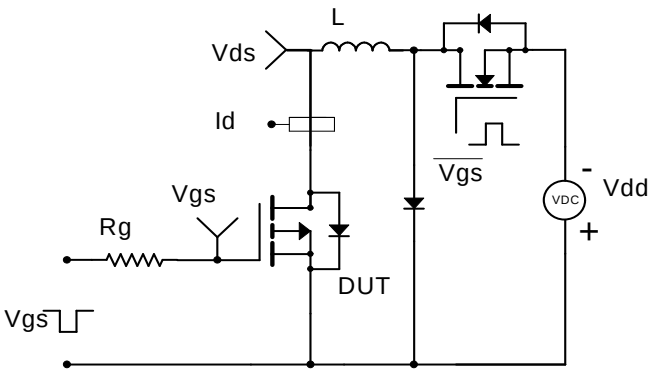

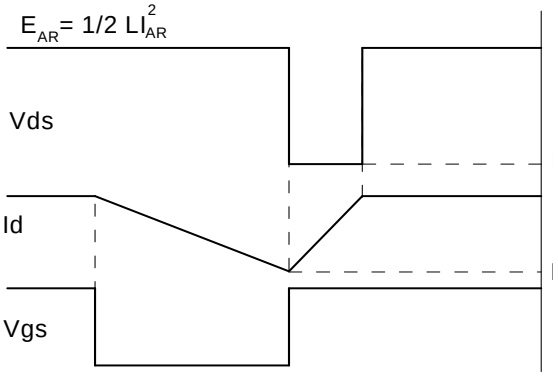

Diode Recovery Test Circuit & Waveforms

