2SA733

PNP SILICON TRANSISTOR

LOW FREQUENCY AMPLIFIER PNP EPITAXIAL SILICON TRANSISTOR

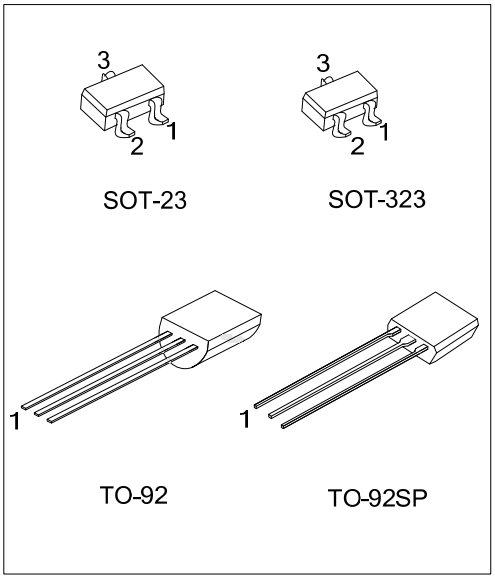

■ DESCRIPTION

The UTC **2SA733** is a low frequency amplifier.

■ FEATURES

* Collector-emitter voltage:
  BV_{CEO}=-50V
* Collector current up to -150mA
* High h_{FE} linearity
* Complimentary to 2SC945

■ ORDERING INFORMATION

Ordering Number		Package	Pin Assignment			Packing
Lead Free	Halogen Free		1	2	3	
-	2SA733G-x-AE3-R	SOT-23	E	B	C	Tape Reel
-	2SA733G-x-AL3-R	SOT-323	E	B	C	Tape Reel
2SA733L-x-T92-B	2SA733G-x-T92-B	TO-92	E	C	B	Tape Box
2SA733L-x-T92-K	2SA733G-x-T92-K	TO-92	E	C	B	Bulk
2SA733L-x-T9S-B	2SA733G-x-T9S-B	TO-92SP	E	C	B	Tape Box
2SA733L-x-T9S-K	2SA733G-x-T9S-K	TO-92SP	E	C	B	Bulk

Note: Pin Assignment: E: Emitter C: Collector B: Base

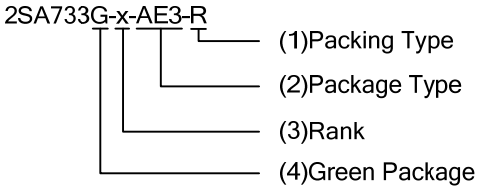

(1) B: Tape Box, K: Bulk, R: Tape Reel
(2) AE3: SOT-23, AL3: SOT-323, T92: TO-92
T9S: TO-92SP
(3) x: refer to Classification of h_{FE}
(4) G: Halogen Free and Lead Free, L: Lead Free

■ MARKING

SOT-23 / SOT-323	TO-92	TO-92SP
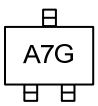	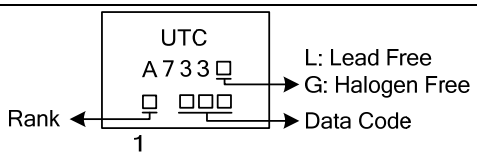	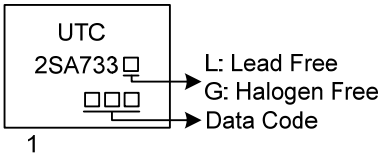

Copyright © 2016 Unisonic Technologies Co., Ltd

■ ABSOLUTE MAXIMUM RATING (T_A=25°C, unless otherwise specified)

PARAMETER		SYMBOL	RATINGS	UNIT
Collector-Base Voltage		V_{CBO}	-60	V
Collector-Emitter Voltage		V_{CEO}	-50	V
Emitter-Base Voltage		V_{EBO}	-5	V
Collector Dissipation	SOT-23	P_C	300	mW
	SOT-323		200	
	TO-92		750	
	TO-92SP		550	
Collector Current		I_C	-150	mA
Junction Temperature		T_J	125	°C
Storage Temperature		T_{STG}	-55 ~ +150	°C

Note: Absolute maximum ratings are those values beyond which the device could be permanently damaged.
Absolute maximum ratings are stress ratings only and functional device operation is not implied.

■ ELECTRICAL CHARACTERISTICS (T_A=25°C, unless otherwise specified)

PARAMETER	SYMBOL	TEST CONDITIONS	MIN	TYP	MAX	UNIT
Collector-Base Breakdown Voltage	BV_{CBO}	I_C=-100μA, I_E=0	-60			V
Collector-Emitter Breakdown Voltage	BV_{CEO}	I_C=-10mA, I_B=0	-50			V
Collector-Emitter Saturation Voltage	$V_{CE(SAT)}$	I_C=-100mA, I_B=-10mA		-0.1	-0.3	V
Collector Cut-Off Current	I_{CBO}	V_{CB}=-40V, I_E=0			-100	nA
Emitter Cut-Off Current	I_{EBO}	V_{EB}=-3V, I_C=0			-100	nA
DC Current Gain	h_{FE}	V_{CE}=-6V, I_C=-1mA	90		600	
Current Gain Bandwidth Product	f_T	V_{CE}=-10V, I_C=-50mA	100	190		MHz
Output Capacitance	Cob	V_{CB}=-10V, I_E=0, f=1MHz		2.0	3.0	pF
Noise Figure	NF	I_C=-0.1mA, V_{CE}=-6V R_G=10kΩ, f=100Hz		4.0	6.0	dB

■ CLASSIFICATION OF h_{FE}

RANK	R	Q	P	K
RANGE	90-180	135-270	200-400	300-600

■ TYPICAL CHARACTERISTICS

Fig.1 Static Characteristics

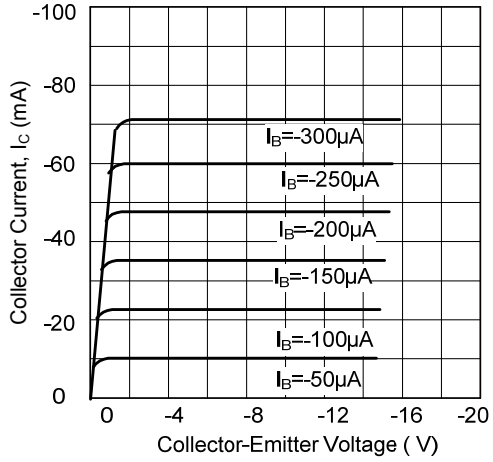

Fig.2 DC Current Gain

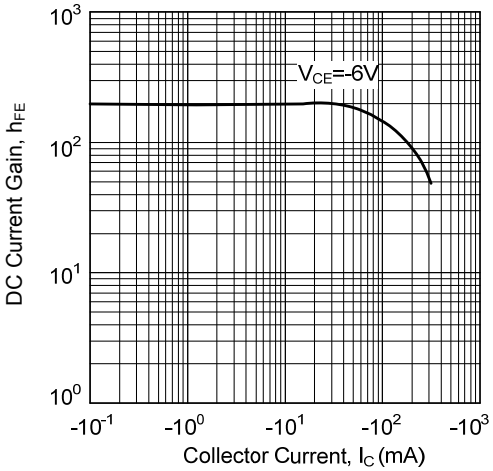

Fig.3 Base-Emitter on Voltage

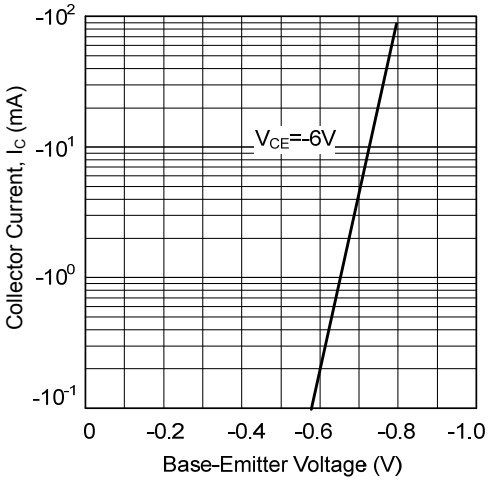

Fig.4 Saturation Voltage

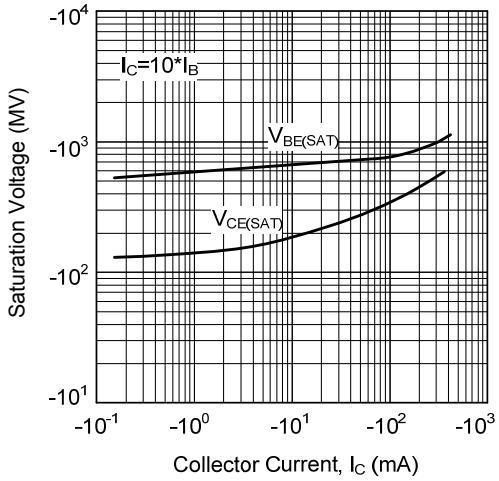

Fig.5 Current Gain-Bandwidth Product

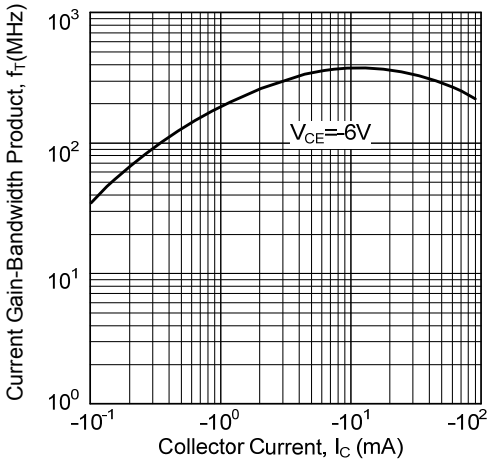

Fig.6 Collector Output Capacitance

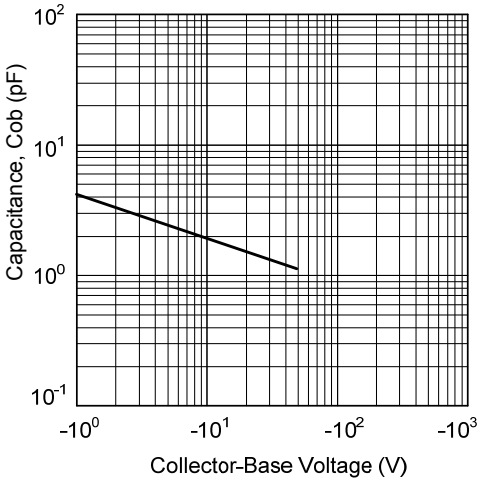

■ TYPICAL CHARACTERISTICS (Cont.)

Collector Power Dissipation vs. Ambient Temperature

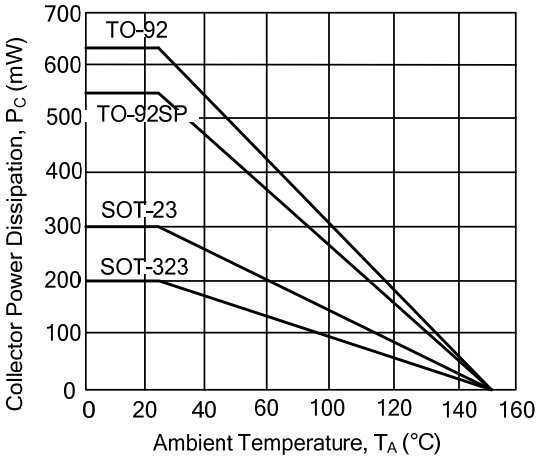

Safe Operating Area

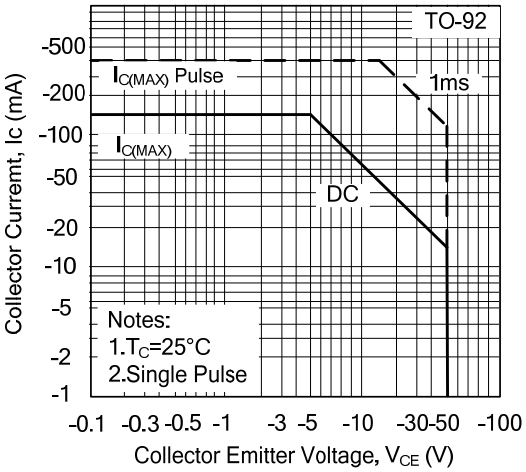

UTC assumes no responsibility for equipment failures that result from using products at values that exceed, even momentarily, rated values (such as maximum ratings, operating condition ranges, or other parameters) listed in products specifications of any and all UTC products described or contained herein. UTC products are not designed for use in life support appliances, devices or systems where malfunction of these products can be reasonably expected to result in personal injury. Reproduction in whole or in part is prohibited without the prior written consent of the copyright owner. The information presented in this document does not form part of any quotation or contract, is believed to be accurate and reliable and may be changed without notice.